YAMAHA

PARTS CATALOGUE

YFS200W (5VMB) CANADA
YFS200W (5VMB) EUROPE
YFS200W (5VMC) OCEANIA
YF200S (5VMC) JAPAN

1F5VM-100E1

(2F5VM-100E1)

YAMAHA GENUINE Parts & Accessories

A2

YFS200W/YF200S
PARTS CATALOGUE
©2006 by Yamaha Motor Co., Ltd.
1st edition, July 2006
All rights reserved.
Any reprinting or unauthorized use
without the written permission of
Yamaha Motor Co., Ltd.
is expressly prohibited.

A3

A4

FOREWORD

This Parts Catalogue is related to the parts for the model(s) on the cover page. When you are ordering replacement parts, please refer to this Parts Catalogue and quote both part numbers and part names correctly.

1. Modifications or additions which have been made after the issue of the Parts Catalogue will be announced in the Parts News.
   It is advisable that you make the necessary corrections to the Parts Catalogue according to the Parts News.

2. Abbreviations
   The following abbreviations are used in this Parts Catalogue.

   "UR" Use specified parts number.
   "UN" Use as many as needed.
   "AP" Alternate Parts
   "LM" Locally Made (Parts need to be ordered locally)
   "F#" Frame No. (Applicable machine No.)
   "O/S" Over Size

3. The number of components for assembly
   - Parts, which are to be supplied in an assembly, are listed with a dot (.) in front of the part name as shown below.
   - The numeral appearing to the right of each component part indicates the quantity of parts for each assembly unit.

PART NO.	DESCRIPTION	Q'TY	REMARKS
2F5–83310–60	FRONT FLASHER LIGHT ASSY	2	
115–83311–60	.BULB (6V–18W)	1	

4. Applicable colours of graphics are represented in the "REMARKS" as shown below.

PART NO.	DESCRIPTION	Q'TY	REMARKS
2N4–24110–00–X5	FUEL TANK COMP.	2	MXR
3J1–24240–10	.GRAPHIC, FUEL TANK	1	FOR MXR

5. Note that the illustrations for reference in finding parts numbers are not to be used for assembling. When assembling, please use the applicable service manual.

6. The asterisk (*) before a reference number indicates modified items after the first edition.

7. Applicable Serial No.

Engine Serial No.

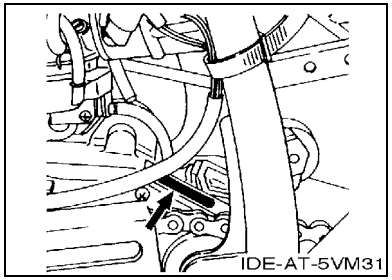

Frame Serial No.

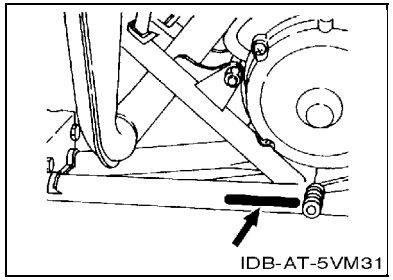

8. Applicable Colour Code (The (*) mark shows Model colour.)

Abbreviation	Colour Name	Colour Code
BWS1(*)	BLUISH WHITE SOLID 1	0892
S8	SILVER 8	0895
SL	SILVER	0035
WW	WHITE	0036

9. Quantity Column Information

Column No.	Name Of Q’ty Column	Destination
1	CAN	CANADA
2	EUR	EUROPE
3	OCE	AUSTRALIA, NEW ZEALAND
4	JPN	JAPAN

MODEL LABEL

(1) A label called “Model Label” is affixed in the location as indicated in (3) below. When using this parts catalogue, please be sure to cross–reference the “model code – production code No.” in the catalogue with the “model code – production code No.” indicated on the Model Label affixed onto the product concerned.

(2) “Model Label” Indication

a b ○ xxxx – xxx ● x c	a: Model Type Code b: Production Code No. c: Colouring Type

○ 4TW1–010 ● A

(3) Model Label Affixing Location

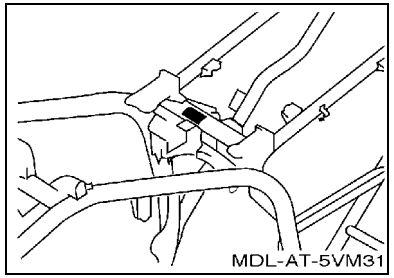

(4) Colouring Information

Model Code	Colouring Type Code	Colour Code	Colour Name	Abbreviation
5VMB	A	0892	BLUISH WHITE SOLID 1	BWS1
5VMC	A	0892	BLUISH WHITE SOLID 1	BWS1

(5) Model Code – Production Code Number of Model Listed in This Parts Catalogue

Model Code	Production Code No.	Country (destination)
5VMB	010	CANADA
	020	EUROPE
5VMC	010	AUSTRALIA
		NEW ZEALAND
	020	JAPAN

Model Code	Production Code No.	Country (destination)

CONTENTS

ENGINE

CYLINDER HEAD B2
CRANKSHAFT & PISTON B3
OIL PUMP B5
INTAKE B6
CARBURETOR B7
EXHAUST B9
CRANKCASE B10
CRANKCASE COVER 1 ..... B11
STARTER CLUTCH B12
CLUTCH B13
TRANSMISSION B14
SHIFT CAM & FORK C2
SHIFT SHAFT C3

CHASSIS

FRAME C4
FRONT FENDER C5
REAR FENDER C6
OIL TANK C7
REAR ARM C8
REAR SUSPENSION C9
STEERING C10
FRONT SUSPENSION & WHEEL C11
FUEL TANK C13
SEAT C14
FRONT WHEEL C15
FRONT BRAKE CALIPER D3
REAR WHEEL D4
REAR BRAKE CALIPER D6
STEERING HANDLE & CABLE D7
FRONT MASTER CYLINDER D9
STAND & FOOTREST D10
REAR MASTER CYLINDER D11
GUARD D12
GENERATOR D13
HEADLIGHT D14
TAILLIGHT D15
HANDLE SWITCH & LEVER E2
ELECTRICAL 1 ..... E3
ELECTRICAL 2 ..... E4
EMBLEM & LABEL 1 ..... E5
EMBLEM & LABEL 2 ..... E6
EMBLEM & LABEL 3 ..... E7
EMBLEM & LABEL 4 ..... E8

INDEX

NUMERICAL INDEX M1

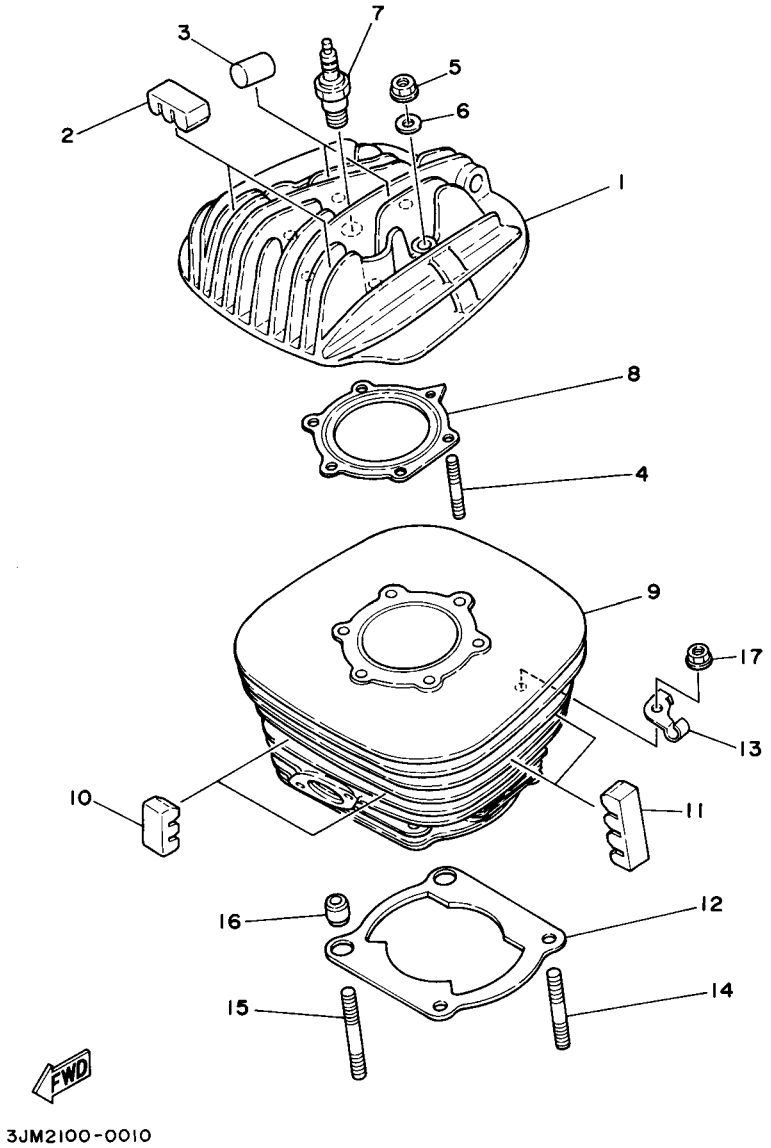

FIG. 1 CYLINDER HEAD

REF. NO.	PART NO.	DESCRIPTION	CAN	EUR	OCE	JPN		REMARKS
1	2XJ–11111–00	HEAD, CYLINDER 1	1	1	1	1		
2	3R9–11162–00	ABSORBER 2	2	2	2	2		
3	1K6–11128–00	ABSORBER 4	2	2	2	2		
4	90116–08394	BOLT, STUD	6	6	6	6		
5	95317–08600	NUT	6	6	6	6		
6	90201–08649	WASHER, PLATE	6	6	6	6		
7	94701–00204	PLUG, SPARK (NGK BR8ES)	1	1	1			
	94703–00204	PLUG, SPARK (NGK BR8ES)				1		
8	2XJ–11181–00	GASKET, CYLINDER HEAD 1	1	1	1	1		
9	2XJ–11311–02	CYLINDER 1	1	1	1	1		
10	3R9–11162–00	ABSORBER 2	2	2	2	2		
11	3R6–11162–00	ABSORBER 2	4	4	4	4		
12	3JM–11351–01	GASKET, CYLINDER	1	1	1	1		
13	10V–1131E–00	HOLDER 1	1	1	1	1		
14	90116–08318	BOLT, STUD	2	2	2	2		
15	90116–08388	BOLT, STUD	2	2	2	2		
16	99530–10114	PIN, DOWEL	2	2	2	2		
17	90179–08299	NUT	4	4	4	4		

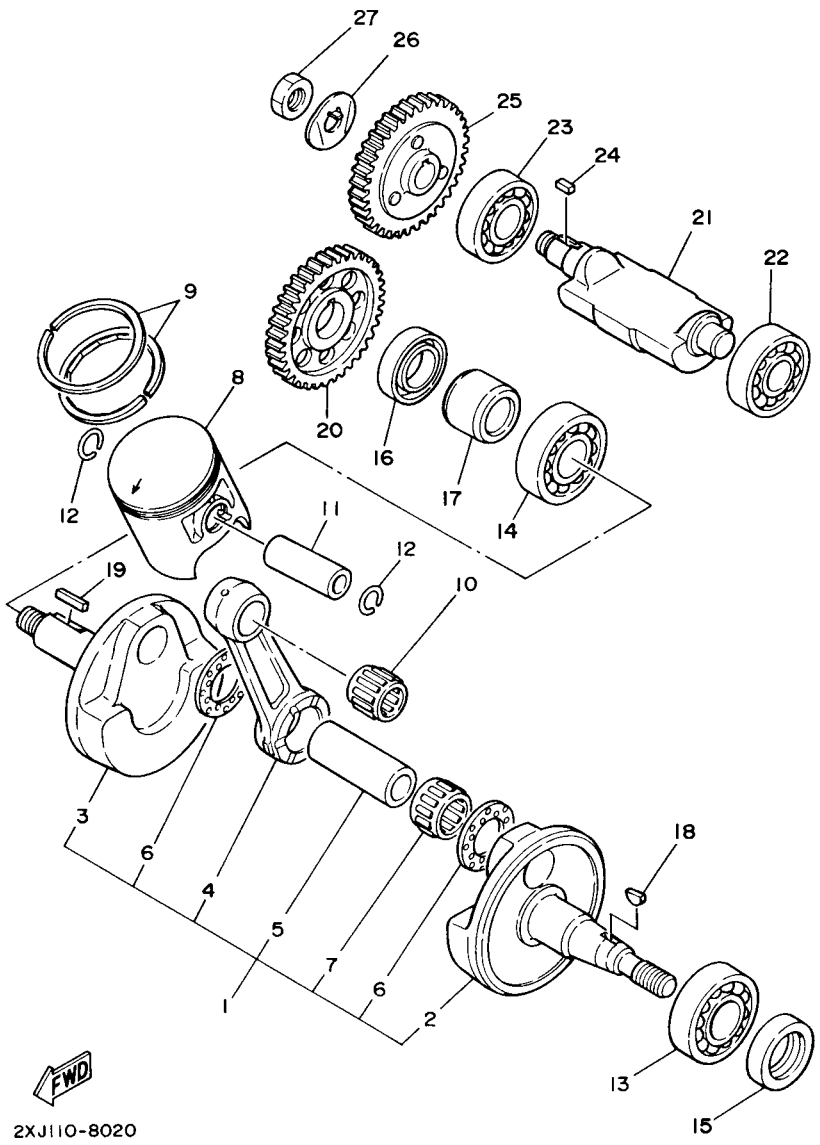

FIG. 2 CRANKSHAFT & PISTON

REF. NO.	PART NO.	DESCRIPTION	CAN	EUR	OCE	JPN		REMARKS
1	37F–11400–00	CRANKSHAFT ASSY	1	1	1	1		
2	37F–11412–00	.CRANK 1	1	1	1	1		
3	37F–11422–00	.CRANK 2	1	1	1	1		
4	43G–11651–00	.ROD, CONNECTING	1	1	1	1		
5	37F–11681–00	.PIN, CRANK 1	1	1	1	1		
6	90209–22248	.WASHER	2	2	2	2		
7	93310–522L4	.BEARING	1	1	1	1		
8	2XJ–11631–01–97	PISTON (STD)	1	1	1	1		
	2XJ–11635–01	PISTON (0.25MM O/S)	1	1	1	1		AP
	2XJ–11636–01	PISTON (0.50MM O/S)	1	1	1	1		AP
9	3JM–11601–00	PISTON RING SET (STD)	1	1	1	1		
	3JM–11601–10	PISTON RING SET (0.25MM O/S)	1	1	1	1		AP
	3JM–11601–20	PISTON RING SET (0.50MM O/S)	1	1	1	1		AP
10	93310–316H6	BEARING	1	1	1	1		
11	4L0–11633–00	PIN, PISTON	1	1	1	1		
12	93450–17044	CIRCLIP	2	2	2	2		
13	93306–20562	BEARING	1	1	1	1		
14	93306–30556	BEARING	1	1	1	1		
15	93102–25012	OIL SEAL	1	1	1	1		
16	93103–32099	OIL SEAL	1	1	1	1		
17	90387–206K3	COLLAR	1	1	1	1		
18	90280–03017	KEY, WOODRUFF	1	1	1	1		
19	90282–05047	KEY, STRAIGHT	1	1	1	1		
20	10V–11536–01	GEAR, DRIVE (43T)	1	1	1	1		
21	37F–11454–00	WEIGHT 1	1	1	1	1		
22	93306–20211	BEARING	1	1	1	1		
23	93306–20335	BEARING	1	1	1	1		

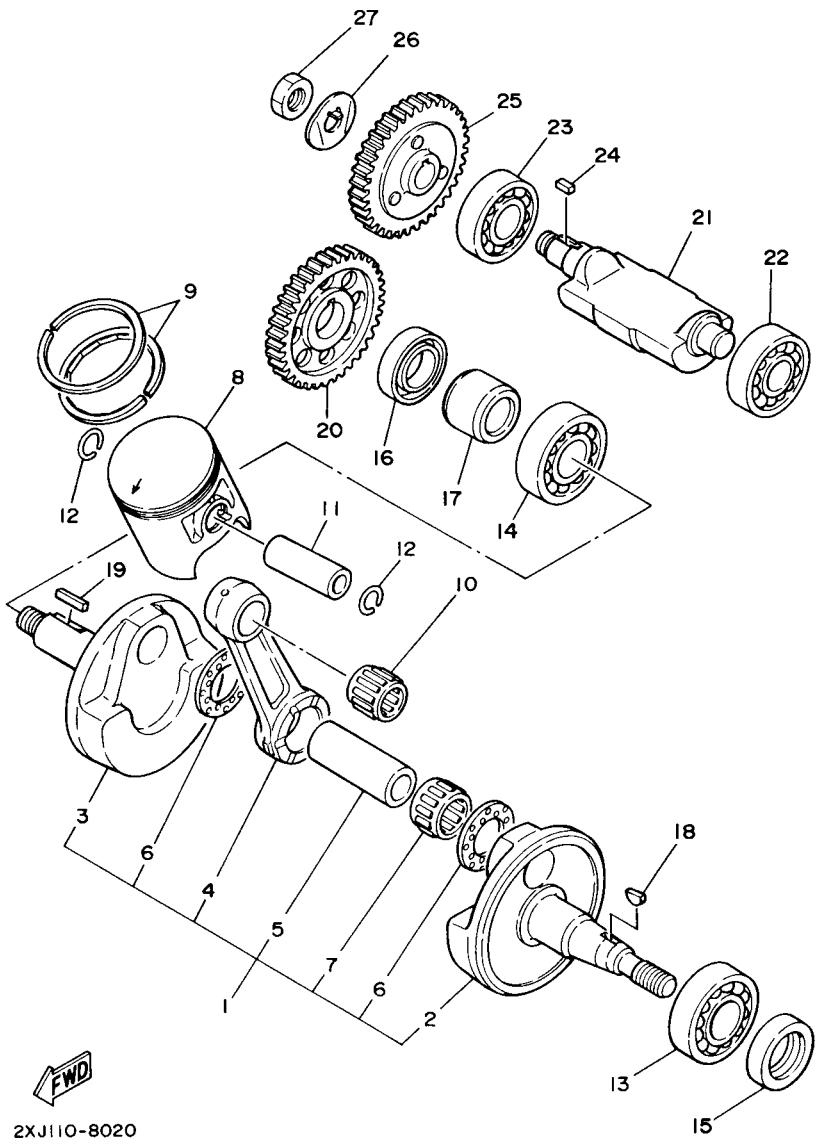

FIG. 2 CRANKSHAFT & PISTON

REF. NO.	PART NO.	DESCRIPTION	CAN	EUR	OCE	JPN		REMARKS
24	90282–05013	KEY, STRAIGHT	1	1	1	1		
25	37F–11530–00	BALANCER WEIGHT GEAR COMP.	1	1	1	1		
26	90215–12235	WASHER, LOCK	1	1	1	1		
27	90170–12337	NUT	1	1	1	1		

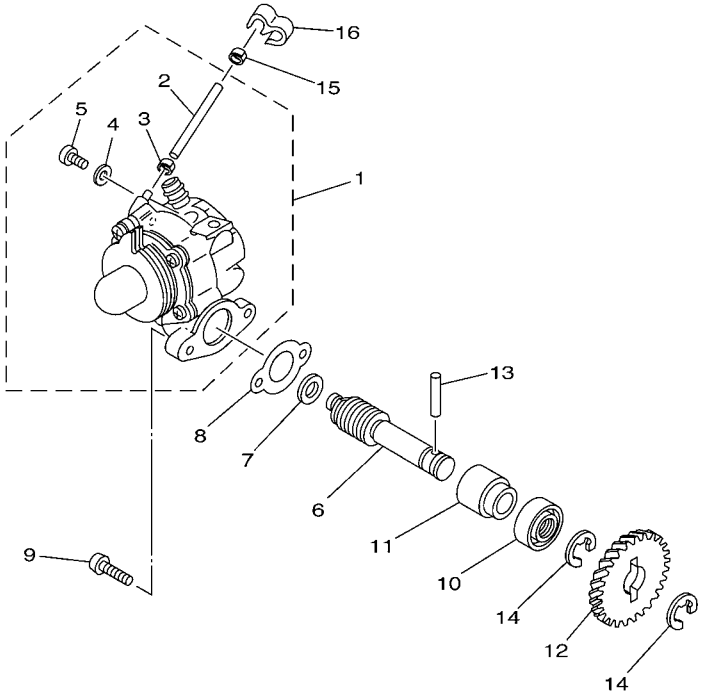

5KJ7100-2030

FIG. 3 OIL PUMP

REF. NO.	PART NO.	DESCRIPTION	CAN	EUR	OCE	JPN		REMARKS
1	2XJ–13100–00	OIL PUMP ASSY	1	1	1	1		
2	90445–054F8	.HOSE	1	1	1	1		
3	90468–02033	.CLIP	1	1	1	1		
4	90430–04004	.GASKET	1	1	1	1		
5	98907–04008	.SCREW, BIND	1	1	1	1		
6	10V–13175–00	SHAFT, WORM	1	1	1	1		
7	90201–08624	WASHER, PLATE	1	1	1	1		
8	126–13116–01	GASKET, PUMP CASE	1	1	1	1		
9	98507–05014	SCREW, PAN HEAD	2	2	2	2		
10	93101–10001	OIL SEAL	1	1	1	1		
11	137–13176–00	METAL, WORM SHAFT OUTER	1	1	1	1		
12	10V–13178–01	GEAR, PUMP DRIVE	1	1	1	1		
13	93603–22028	PIN, DOWEL	1	1	1	1		
14	93430–08007	CIRCLIP	2	2	2	2		
15	90468–02033	CLIP	1	1	1	1		
16	90468–15020	CLIP	1	1	1	1		

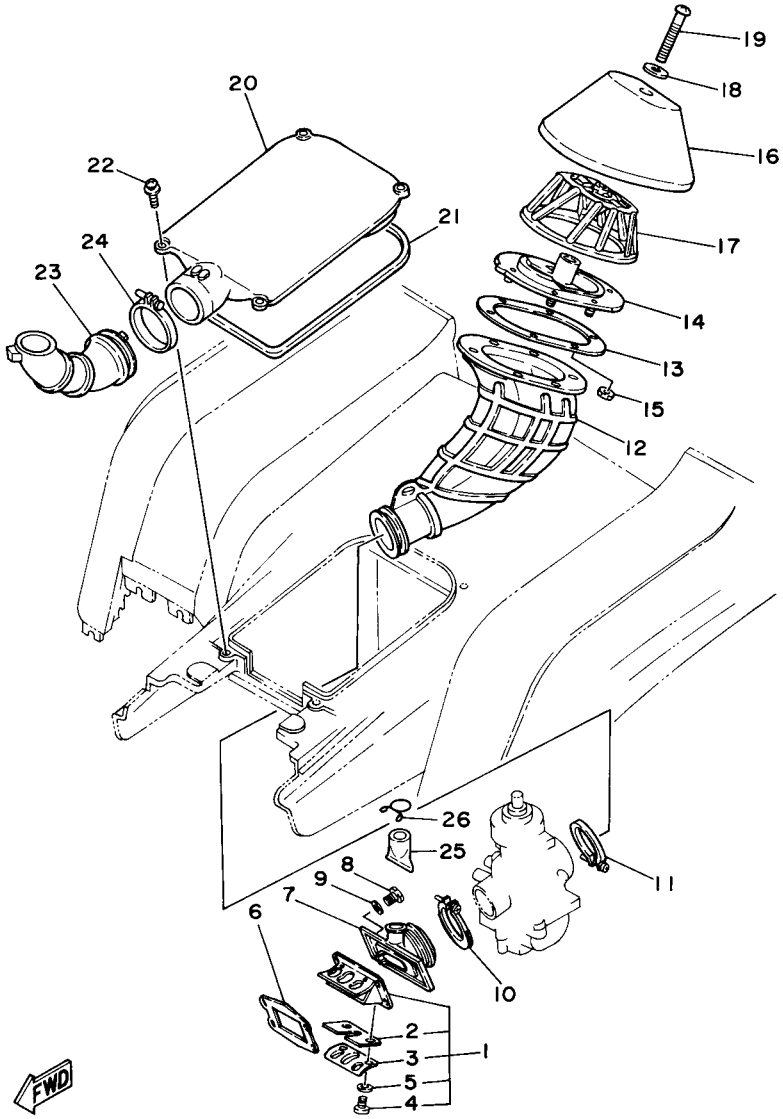

FIG. 4 INTAKE

REF. NO.	PART NO.	DESCRIPTION	CAN	EUR	OCE	JPN		REMARKS
1	2HF–13610–01	REED VALVE ASSY	1	1	1	1		
2	2HF–13613–00	.REED, VALVE	2	2	2	2		
3	58T–13616–01	.STOPPER, REED VALVE	2	2	2	2		
4	98517–03008	.SCREW, PAN HEAD	4	4	4	4		
5	92907–03100	.WASHER, SPRING	4	4	4	4		
6	3JM–13621–00	GASKET, VALVE SEAT	1	1	1	1		
7	2XJ–13565–00	JOINT, CARBURETOR	1	1	1	1		
8	97007–06025	BOLT	4	4	4	4		
9	92907–06600	WASHER, PLATE	4	4	4	4		
10	90450–44046	HOSE CLAMP ASSY	1	1	1	1		
11	90460–49058	CLAMP, HOSE	1	1	1	1		
12	2XJ–14453–00	JOINT, AIR CLEANER 1	1	1	1	1		
13	2XJ–14477–00	PLATE	1	1	1	1		
14	2XJ–14459–00	HOLDER, GUIDE	1	1	1	1		
15	95607–05100	NUT, U	6	6	6	6		
16	2XJ–14451–00	ELEMENT, AIR CLEANER	1	1	1	1		
17	2XJ–14458–00	GUIDE	1	1	1	1		
18	90209–06096	WASHER	1	1	1	1		
19	98507–06060	SCREW, PAN HEAD	1	1	1	1		
20	2XJ–14412–01	CAP, CLEANER CASE 1	1	1	1	1		
21	15A–14462–00	SEAL	1	1	1	1		
22	90159–06085	SCREW, WITH WASHER	4	4	4	4		
23	2XJ–14437–00	DUCT	1	1	1	1		
24	90460–56105	CLAMP, HOSE	1	1	1	1		
25	59V–14457–00	SEAL	1	1	1	1		
26	90467–22080	CLIP	1	1	1	1		

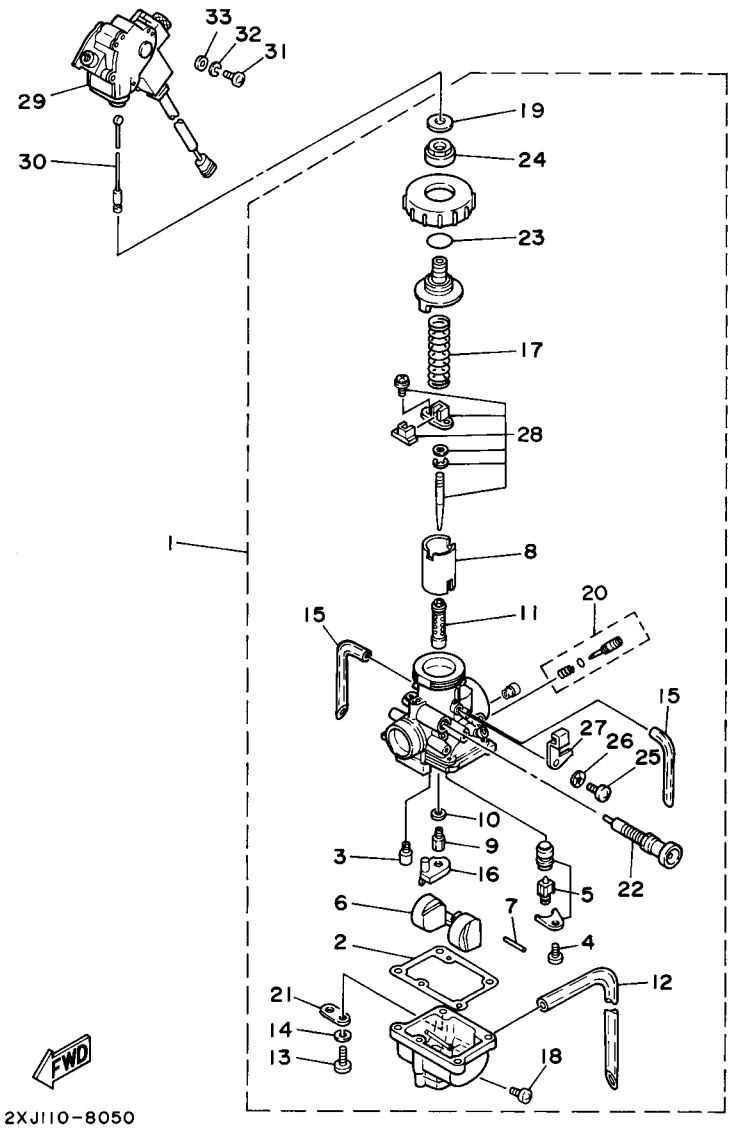

FIG. 5 CARBURETOR

REF. NO.	PART NO.	DESCRIPTION	CAN	EUR	OCE	JPN		REMARKS
1	5VM–14101–00	CARBURETOR ASSY 1	1	1	1	1		
2	304–14184–00	.GASKET, FLOAT CHAMBER	1	1	1	1		
3	260–14142–32	.JET, PILOT (# 32.5)	1	1	1	1		
4	98502–04008	.SCREW, PAN HEAD	1	1	1	1		
5	2MA–14107–28	.NEEDLE VALVE SET	1	1	1	1		
6	4L0–14185–00	.FLOAT	1	1	1	1		
7	537–14186–00	.PIN, FLOAT	1	1	1	1		
8	2XJ–14112–20	.VALVE, THROTTLE 1	1	1	1	1		
9	137–14143–46	.JET, MAIN (#230)	1	1	1	1		
10	137–14153–00	.WASHER, MAIN JET	1	1	1	1		
11	4L0–14141–46	.NOZZLE, MAIN	1	1	1	1		
12	2NL–14197–00	.PIPE	1	1	1	1		
13	98502–04016	.SCREW, PAN HEAD	4	4	4	4		
14	92990–04100	.WASHER, SPRING	4	4	4	4		
15	4L0–14197–00	.PIPE	2	2	2	2		
16	2GU–14153–00	.RING	1	1	1	1		
17	248–14131–00	.SPRING, THROTTLE VALVE	1	1	1	1		
18	12R–14191–00	.PLUG, DRAIN	1	1	1	1		
19	2GU–14952–00	.WASHER	1	1	1	1		
20	10W–14104–00	.AIR SCREW SET	1	1	1	1		
21	500–14146–00	.PLATE	1	1	1	1		
22	2GU–14171–00	.PLUNGER, STARTER	1	1	1	1		
23	558–14147–00	.O-RING	1	1	1	1		
24	2GU–14161–00	.NUT, CABLE ADJUSTING	1	1	1	1		
25	98502–05008	.SCREW, PAN HEAD	1	1	1	1		
26	92990–05100	.WASHER, SPRING	1	1	1	1		
27	2GU–14243–00	.PLATE	1	1	1	1		

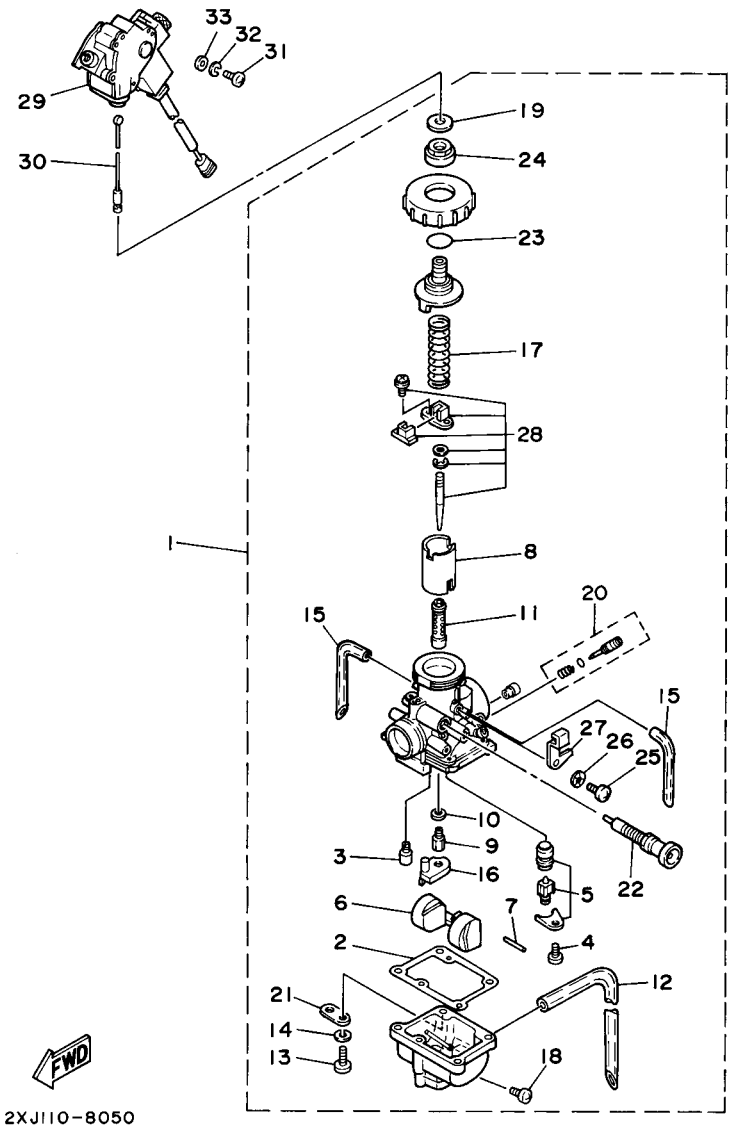

FIG. 5 CARBURETOR

REF. NO.	PART NO.	DESCRIPTION	CAN	EUR	OCE	JPN		REMARKS
28	5VM–1490J–00	.NEEDLE SET	1	1	1	1		
29	3JM–8259E–00	SWITCH ASSY	1	1	1	1		
30	2GU–2633K–00	WIRE, INNER 1	1	1	1	1		
31	98507–03010	SCREW, PAN HEAD	3	3	3	3		
32	92907–03100	WASHER, SPRING	3	3	3	3		
33	92907–03600	WASHER	3	3	3	3		

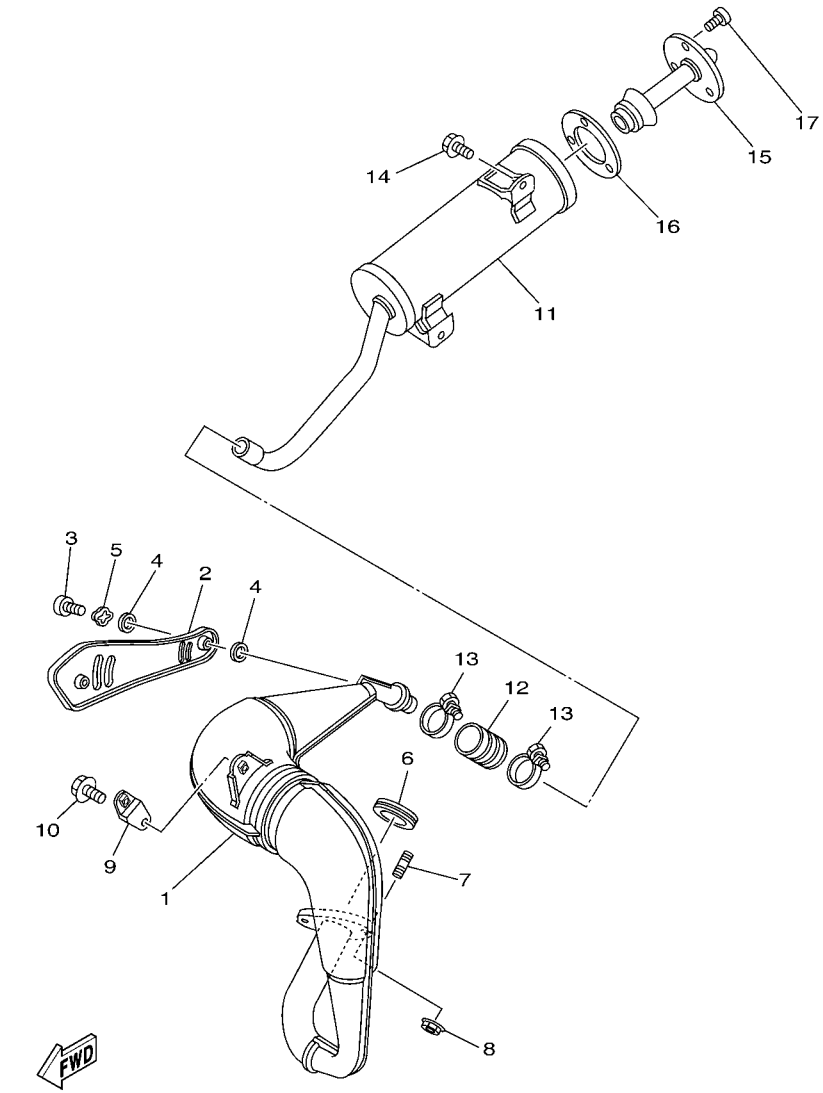

3JMS100-8060

FIG. 6 EXHAUST

REF. NO.	PART NO.	DESCRIPTION	CAN	EUR	OCE	JPN		REMARKS
1	2XJ–14610–00	EXHAUST PIPE ASSY 1	1	1	1	1		
2	2XJ–14718–00	PROTECTOR, MUFFLER 1	1	1	1	1		
3	98907–06010	SCREW, BIND	2	2	2	2		
4	4BD–14766–00	WASHER, PROTECTOR	4	4	4	4		
5	90206–06090	WASHER, WAVE	2	2	2	2		
6	3PA–14613–10	GASKET, EXHAUST PIPE	1	1	1	1		
7	90116–08042	BOLT, STUD	2	2	2	2		
8	90179–08270	NUT	2	2	2	2		
9	565–14771–00	STAY, MUFFLER 1	1	1	1	1		
10	95817–06012	BOLT, FLANGE	2	2	2	2		
11	2XJ–14753–00	SILENCER, EXHAUST	1	1	1	1		
12	1W2–14714–00	GASKET, MUFFLER	1	1	1	1		
13	90460–37026	CLAMP, HOSE	2	2	2	2		
14	95817–08016	BOLT, FLANGE	2	2	2	2		
15	2XJ–14752–00	PIPE, OUTLET	1	1	1	1		
16	2XJ–14755–10	GASKET, SILENCER	1	1	1	1		
17	98907–06010	SCREW, BIND	3	3	3	3		

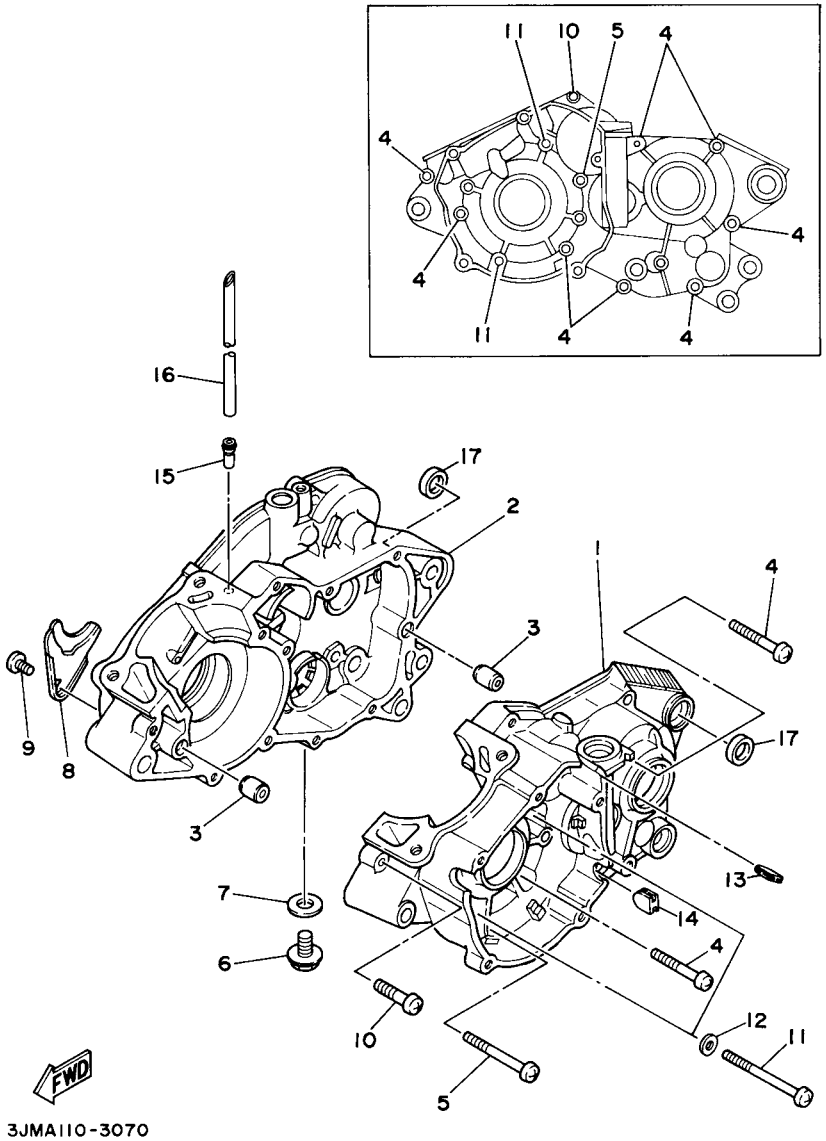

FIG. 7 CRANKCASE

REF. NO.	PART NO.	DESCRIPTION	CAN	EUR	OCE	JPN		REMARKS
1	2XJ–15111–01	CRANKCASE 1	1	1	1	1		
2	2XJ–15121–00	CRANKCASE 2	1	1	1	1		
3	99530–12016	PIN, DOWEL	2	2	2	2		
4	98507–06045	SCREW, PAN HEAD	8	8	8	8		
5	98507–06060	SCREW, PAN HEAD	1	1	1	1		
6	90340–12059	PLUG, STRAIGHT SCREW	1	1	1	1		
7	90201–12172	WASHER, PLATE	1	1	1	1		
8	37F–15128–00	HOLDER	1	1	1	1		
9	98507–08010	SCREW, PAN HEAD	1	1	1	1		
10	98507–06030	SCREW, PAN HEAD	1	1	1	1		
11	98507–06075	SCREW, PAN HEAD	2	2	2	2		
12	92907–06600	WASHER, PLATE	2	2	2	2		
13	90480–01209	GROMMET	1	1	1	1		
14	90338–09206	PLUG	1	1	1	1		
15	137–13115–01	CONNECTOR, SUCTION PIPE	1	1	1	1		
16	90445–09019	HOSE	1	1	1	1		
17	90201–166L5	WASHER, PLATE	2	2	2	2		

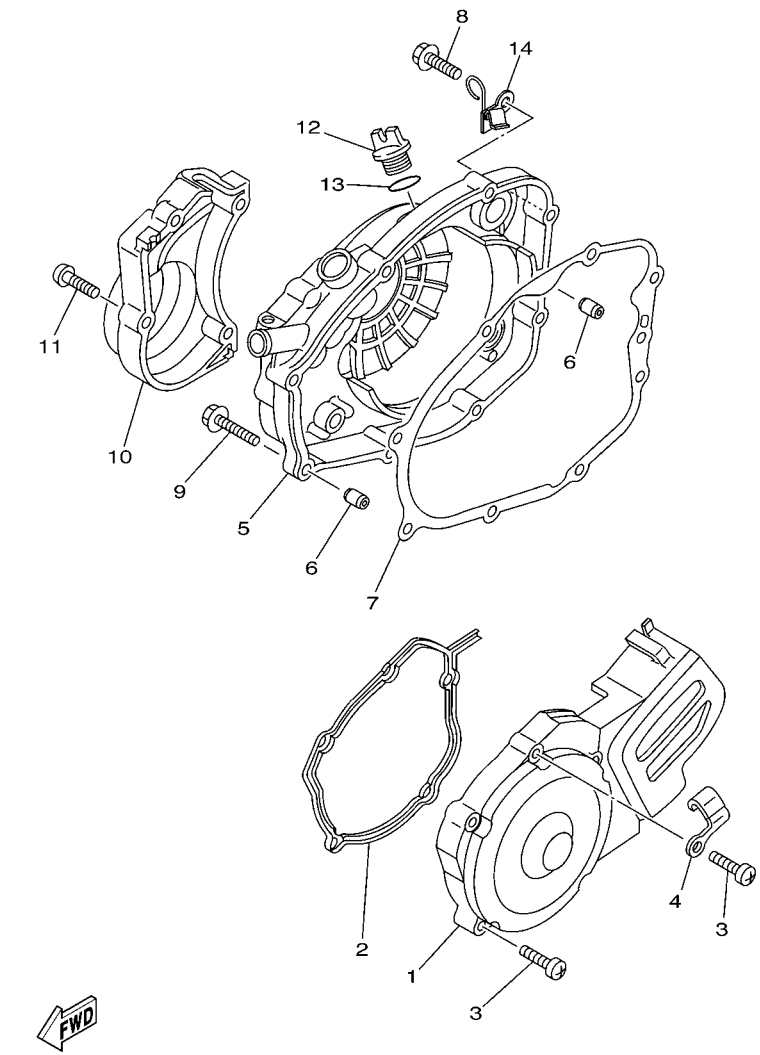

FIG. 8 CRANKCASE COVER 1

REF. NO.	PART NO.	DESCRIPTION	CAN	EUR	OCE	JPN		REMARKS
1	2XJ–15411–00	COVER, CRANKCASE 1	1	1	1	1		
2	2XJ–15379–00	SEAL, CRANKCASE	1	1	1	1		
3	98507–06030	SCREW, PAN HEAD	5	5	5	5		
4	90465–10069	CLAMP	1	1	1	1		
5	2XJ–15420–01	CRANKCASE COVER ASSY 2	1	1	1	1		
6	99530–10014	PIN, DOWEL	2	2	2	2		
7	3JM–15451–11	GASKET, CRANKCASE COVER 1	1	1	1	1		
8	95027–06030	BOLT, FLANGE	6	6	6	6		
9	95027–06035	BOLT, FLANGE	2	2	2	2		
10	37F–15416–00	COVER, OIL PUMP	1	1	1	1		
11	98507–06030	SCREW, PAN HEAD	4	4	4	4		
12	3Y1–15363–00	PLUG, OIL	1	1	1	1		
13	93210–19123	O-RING	1	1	1	1		
14	5VM–13174–00	HOLDER, OIL PIPE	1	1	1	1		

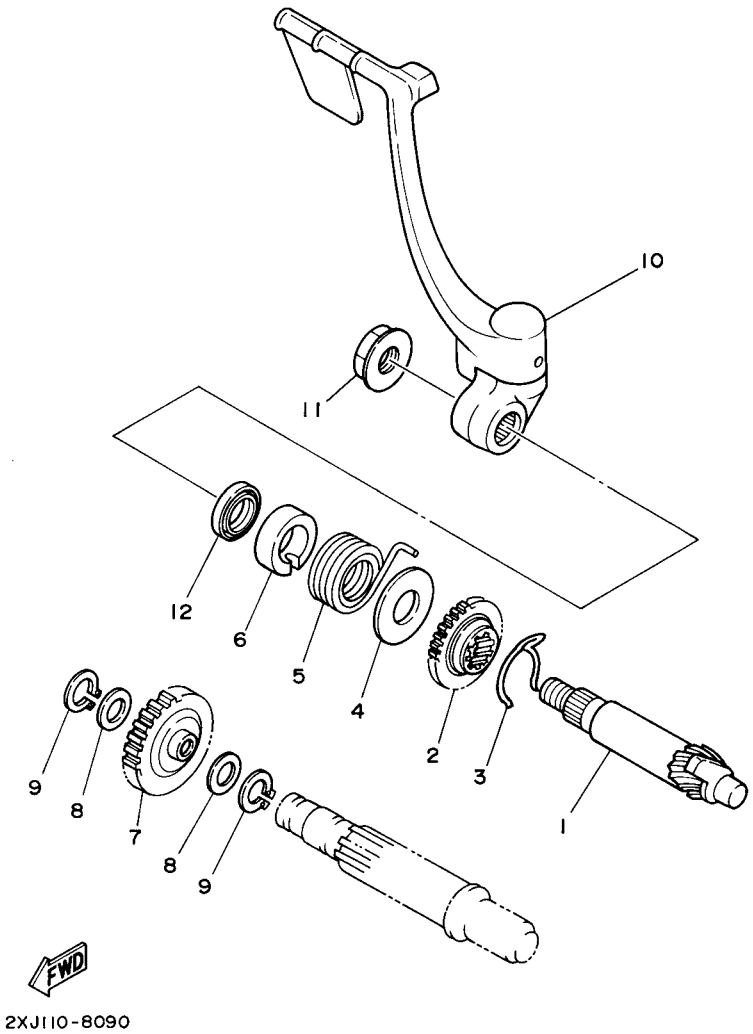

FIG. 9 STARTER CLUTCH

REF. NO.	PART NO.	DESCRIPTION	CAN	EUR	OCE	JPN		REMARKS
1	10V–15660–00	KICK AXLE ASSY	1	1	1	1		
2	10V–15641–00	GEAR, KICK (23T)	1	1	1	1		
3	90468–26048	CLIP	1	1	1	1		
4	90201–200J7	WASHER, PLATE	1	1	1	1		
5	90508–26667	SPRING, TORSION	1	1	1	1		
6	10V–15666–00	SPACER	1	1	1	1		
7	10V–15651–00	GEAR, KICK IDLE (29T)	1	1	1	1		
8	90201–154E8	WASHER, PLATE (T=1.0)	2	2	2	2		
9	99009–15400	CIRCLIP	2	2	2	2		
10	2XJ–15620–10	KICK CRANK ASSY	1	1	1	1		
11	90179–12659	NUT	1	1	1	1		
12	93109–20014	OIL SEAL	1	1	1	1		

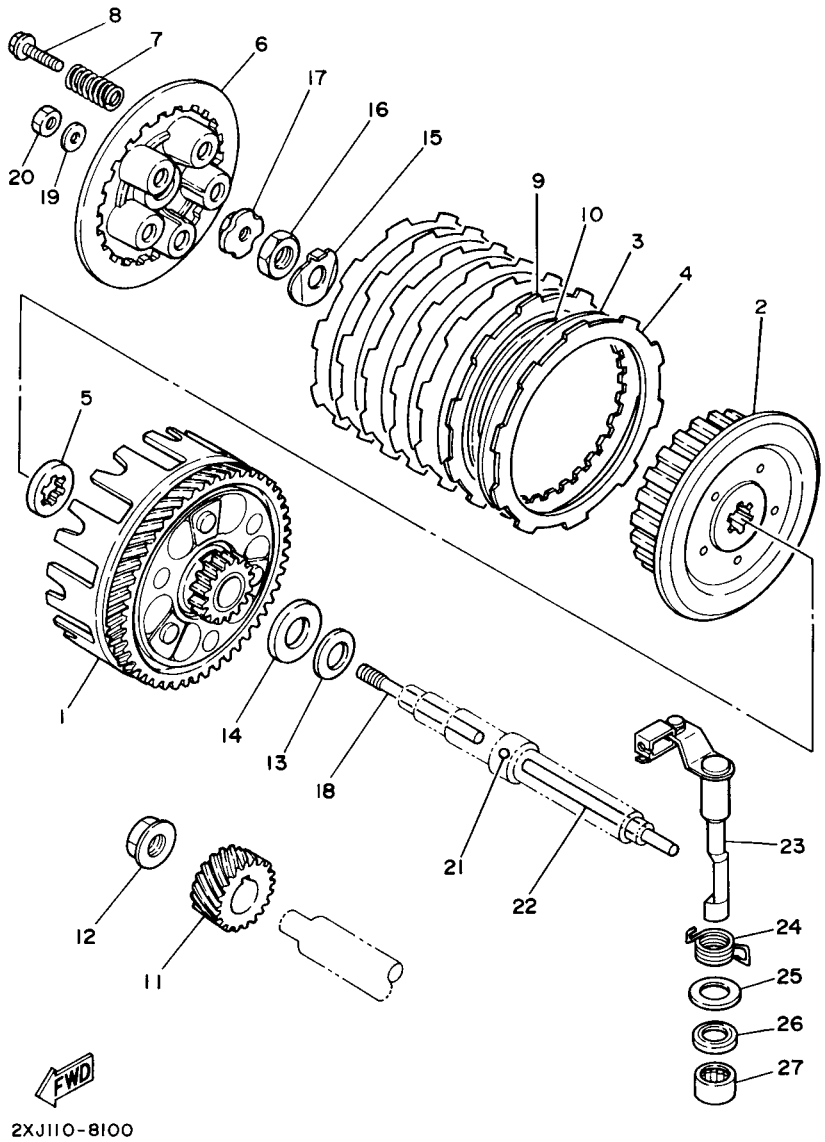

FIG. 10 CLUTCH

REF. NO.	PART NO.	DESCRIPTION	CAN	EUR	OCE	JPN		REMARKS
1	3JM–16150–01	PRIMARY DRIVEN GEAR COMP.	1	1	1	1		
2	37F–16371–01	BOSS, CLUTCH	1	1	1	1		
3	1V1–16324–00	PLATE, CLUTCH 1	6	6	6	6		
4	4V0–16321–00	PLATE, FRICTION	6	6	6	6		
5	2TV–16154–00	PLATE, THRUST 1	1	1	1	1		
6	37F–16351–00	PLATE, PRESSURE 1	1	1	1	1		
7	90501–20568	SPRING, COMPRESSION	5	5	5	5		
8	90119–05001	BOLT, WITH WASHER	5	5	5	5		
9	1HX–16331–00	PLATE, FRICTION 2	1	1	1	1		
10	1HX–16383–00	SPRING, CLUTCH BOSS	1	1	1	1		
11	2JK–16111–01	GEAR, PRIMARY DRIVE (22T)	1	1	1	1		
12	90179–12567	NUT	1	1	1	1		
13	90208–18046	WASHER, CONICAL SPRING	1	1	1	1		
14	90201–180P2	WASHER, PLATE	1	1	1	1		
15	90215–12271	WASHER, LOCK	1	1	1	1		
16	90170–12370	NUT	1	1	1	1		
17	1W1–16358–01	PLATE, PUSH	1	1	1	1		
18	1W1–16356–02	ROD, PUSH 1	1	1	1	1		
19	92907–06200	WASHER	1	1	1	1		
20	95307–06600	NUT	1	1	1	1		
21	93503–16003	BALL	1	1	1	1		
22	2J5–16357–00	ROD, PUSH 2	1	1	1	1		
23	37F–16380–02	PUSH LEVER ASSY	1	1	1	1		
24	90508–20555	SPRING, TORSION	1	1	1	1		
25	90201–14217	WASHER, PLATE	1	1	1	1		
26	93104–14004	OIL SEAL	1	1	1	1		
27	93315–21429	BEARING	1	1	1	1		

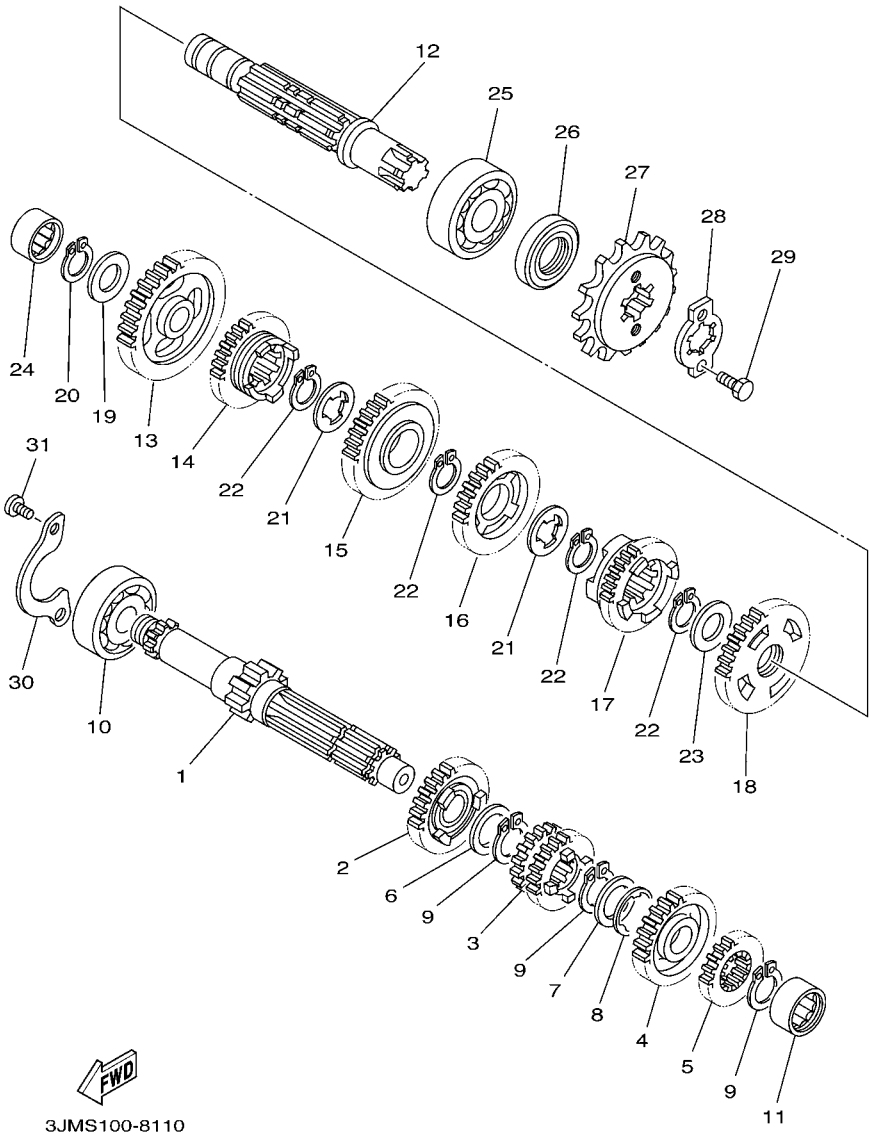

FIG. 11 TRANSMISSION

REF. NO.	PART NO.	DESCRIPTION	CAN	EUR	OCE	JPN		REMARKS
1	2XJ–17411–00	AXLE, MAIN	1	1	1	1		
2	2XJ–17151–00	GEAR, 5TH PINION (18T)	1	1	1	1		
3	2XJ–17131–00	GEAR, 3RD-4TH PINION (15T/16T)	1	1	1	1		
4	2XJ–17161–00	GEAR, 6TH PINION (21T)	1	1	1	1		
5	2XJ–17121–00	GEAR, 2ND PINION (14T)	1	1	1	1		
6	90201–20266	WASHER, PLATE (T=1.0)	1	1	1	1		
7	90201–206L6	WASHER, PLATE	1	1	1	1		
8	90209–16133	WASHER	1	1	1	1		
9	93410–20038	CIRCLIP	3	3	3	3		
10	93306–20431	BEARING	1	1	1	1		
11	93311–31576	BEARING	1	1	1	1		
12	37F–17421–01	AXLE, DRIVE	1	1	1	1		
13	2XJ–17211–00	GEAR, 1ST WHEEL (34T)	1	1	1	1		
14	2XJ–17251–00	GEAR, 5TH WHEEL (19T)	1	1	1	1		
15	2XJ–17231–00	GEAR, 3RD WHEEL (25T)	1	1	1	1		
16	2XJ–17241–00	GEAR, 4TH WHEEL (20T)	1	1	1	1		
17	2XJ–17261–00	GEAR, 6TH WHEEL (19T)	1	1	1	1		
18	2XJ–17221–01	GEAR, 2ND WHEEL (31T)	1	1	1	1		
19	90201–150J4	WASHER, PLATE	1	1	1	1		
20	93440–15012	CIRCLIP	1	1	1	1		
21	90209–18135	WASHER	2	2	2	2		
22	93410–22039	CIRCLIP	4	4	4	4		
23	90201–22555	WASHER, PLATE	1	1	1	1		
24	93311–51554	BEARING	1	1	1	1		
25	93306–30438	BEARING	1	1	1	1		
26	93102–20143	OIL SEAL	1	1	1	1		
27	93832–13164	SPROCKET, DRIVE (13T)	1	1	1	1		

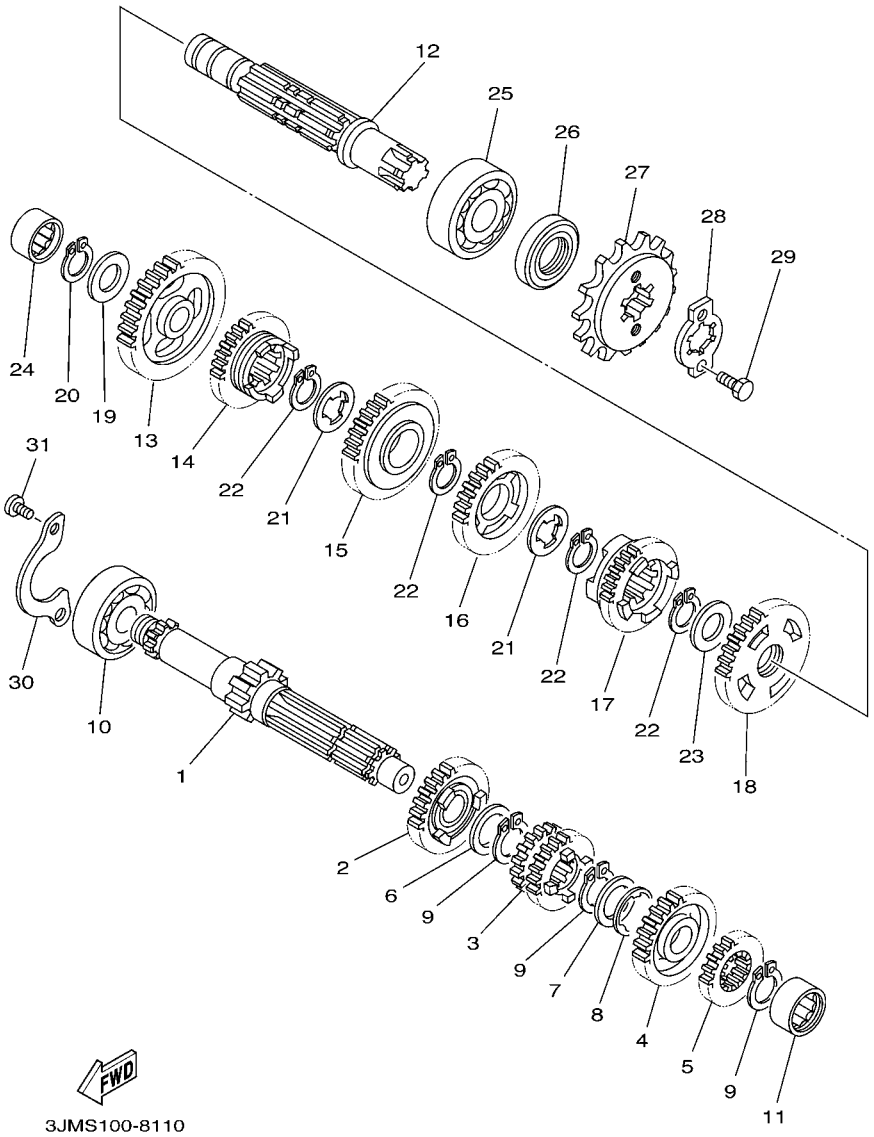

FIG. 11 TRANSMISSION

REF. NO.	PART NO.	DESCRIPTION	CAN	EUR	OCE	JPN		REMARKS
28	5H0–17456–00	HOLDER, SPROCKET	1	1	1	1		
29	97027–06012	BOLT	2	2	2	2		
30	10V–17471–00	PLATE, COVER	1	1	1	1		
31	90157–06071	SCREW, PAN HEAD	2	2	2	2		

FIG. 12 SHIFT CAM & FORK

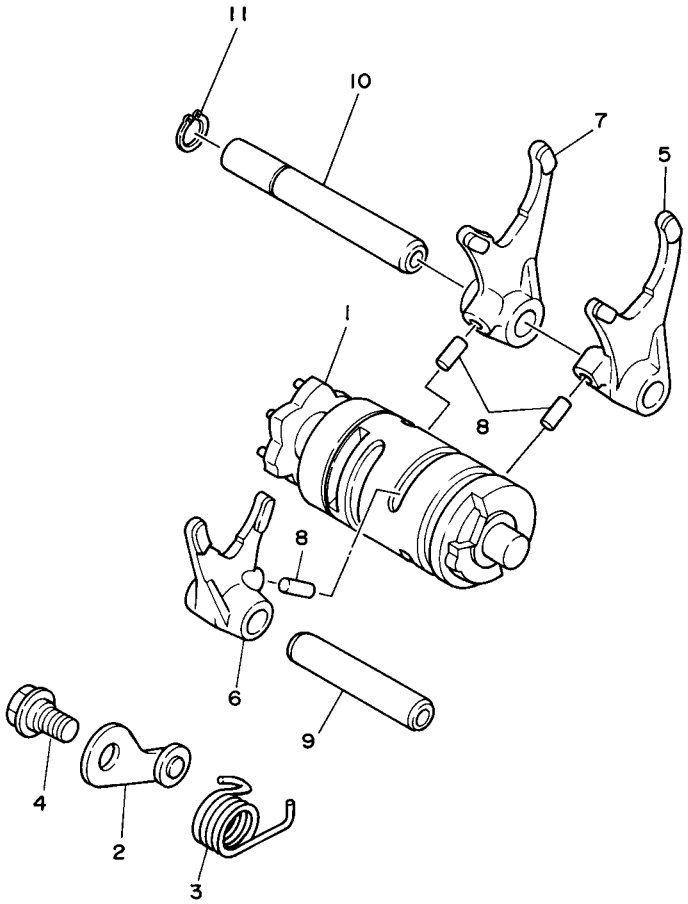

5VM1100-B120

REF. NO.	PART NO.	DESCRIPTION	CAN	EUR	OCE	JPN		REMARKS
1	5KJ–18540–00	SHIFT CAM ASSY	1	1	1	1		
2	10V–18140–00	STOPPER LEVER ASSY	1	1	1	1		
3	90508–29749	SPRING, TORSION	1	1	1	1		
4	90109–063F7	BOLT	1	1	1	1		
5	37F–18511–00	FORK, SHIFT 1	1	1	1	1		
6	37F–18512–00	FORK, SHIFT 2	1	1	1	1		
7	37F–18513–00	FORK, SHIFT 3	1	1	1	1		
8	90250–06013	PIN, STRAIGHT	3	3	3	3		
9	5X5–18531–01	BAR, SHIFT FORK GUIDE 1	1	1	1	1		
10	34X–18535–00	BAR, SHIFT FORK GUIDE 2	1	1	1	1		
11	99009–10400	CIRCLIP	1	1	1	1		

FIG. 13 SHIFT SHAFT

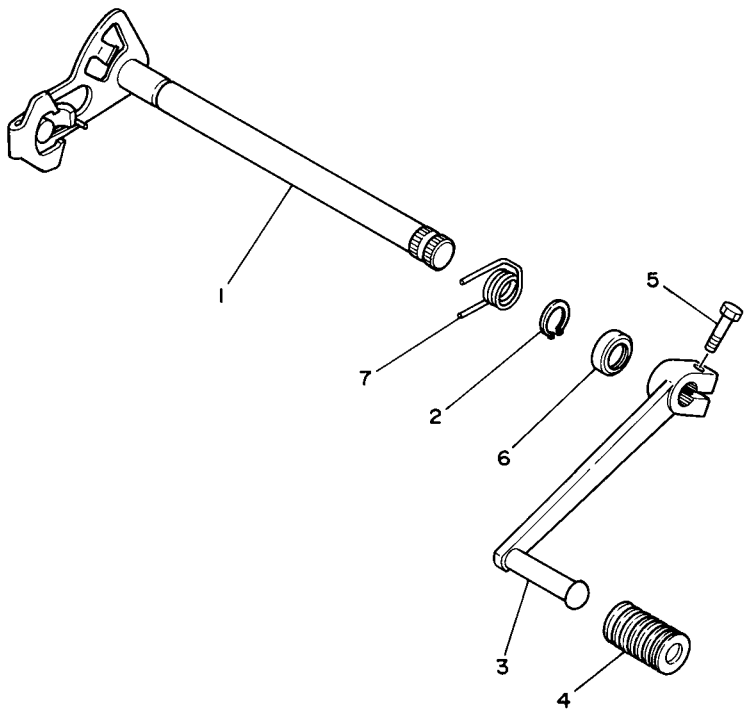

2XJ110-8130

REF. NO.	PART NO.	DESCRIPTION	CAN	EUR	OCE	JPN		REMARKS
1	37F–18101–02	SHIFT SHAFT ASSY	1	1	1	1		
2	99001–10600	CIRCLIP	1	1	1	1		
3	2XJ–18111–10	PEDAL, SHIFT	1	1	1	1		
4	132–18113–01	COVER, SHIFT PEDAL	1	1	1	1		
5	97012–06020	BOLT	1	1	1	1		
6	93101–12173	OIL SEAL	1	1	1	1		
7	90508–32553	SPRING, TORSION	1	1	1	1		

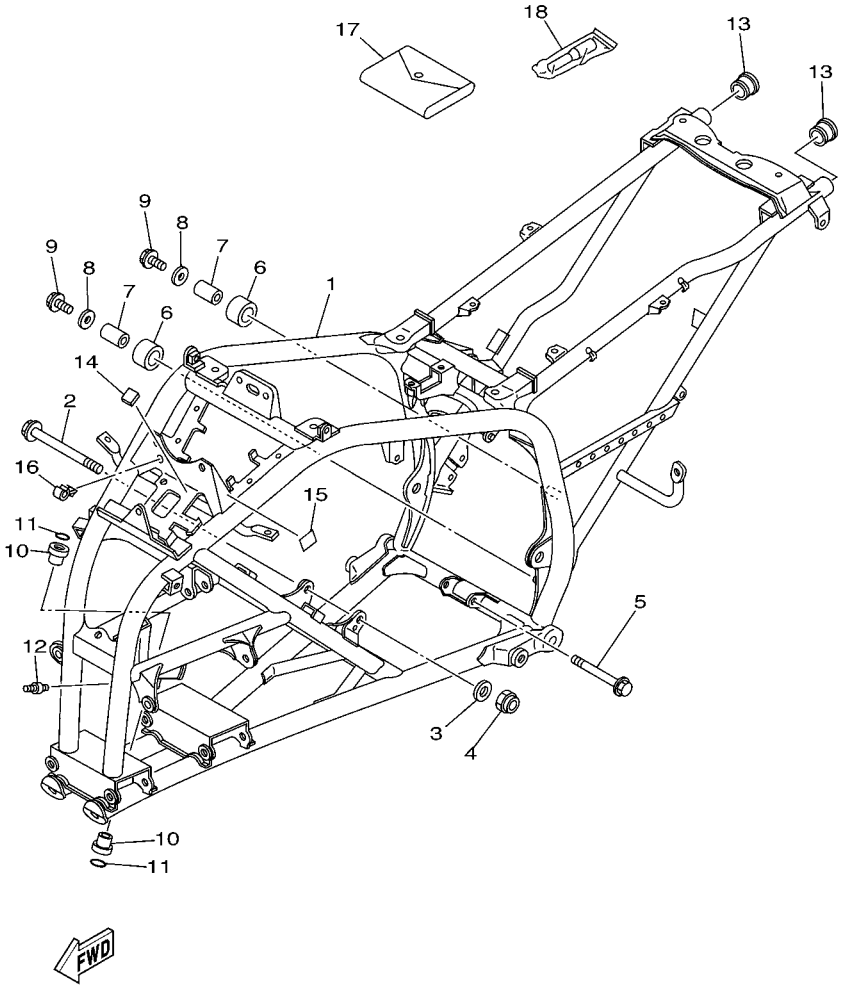

5VM1100-B140

FIG. 14 FRAME

REF. NO.	PART NO.	DESCRIPTION	CAN	EUR	OCE	JPN		REMARKS
1	5VM–21110–10	FRAME COMP.	1	1	1	1		
2	90105–10328	BOLT, FLANGE	1	1	1	1		
3	90201–10774	WASHER, PLATE	1	1	1	1		
4	90185–10060	NUT, SELF-LOCKING	1	1	1	1		
5	90105–08721	BOLT, FLANGE	1	1	1	1		
6	30X–22178–00	TENSIONER	2	2	2	2		
7	4V4–22184–00	BUSH	2	2	2	2		
8	90201–08054	WASHER, PLATE	2	2	2	2		
9	95802–08012	BOLT, FLANGE	2	2	2	2		
10	90381–15040	BUSH, SOLID	2	2	2	2		
11	93210–15414	O-RING	2	2	2	2		
12	93700–06004	NIPPLE, GREASE	1	1	1	1		
13	90338–23172	PLUG	2	2	2	2		
14	7RB–14997–00	SEAL	1	1	1	1		
15	3SP–21732–00	SEAL 1	1	1	1	1		
16	90464–08051	CLAMP	1	1	1	1		
17	2XJ–28100–00	TOOL KIT	1	1	1	1		
18	1NV–2811A–01	GAUGE, AIR	1	1	1	1		

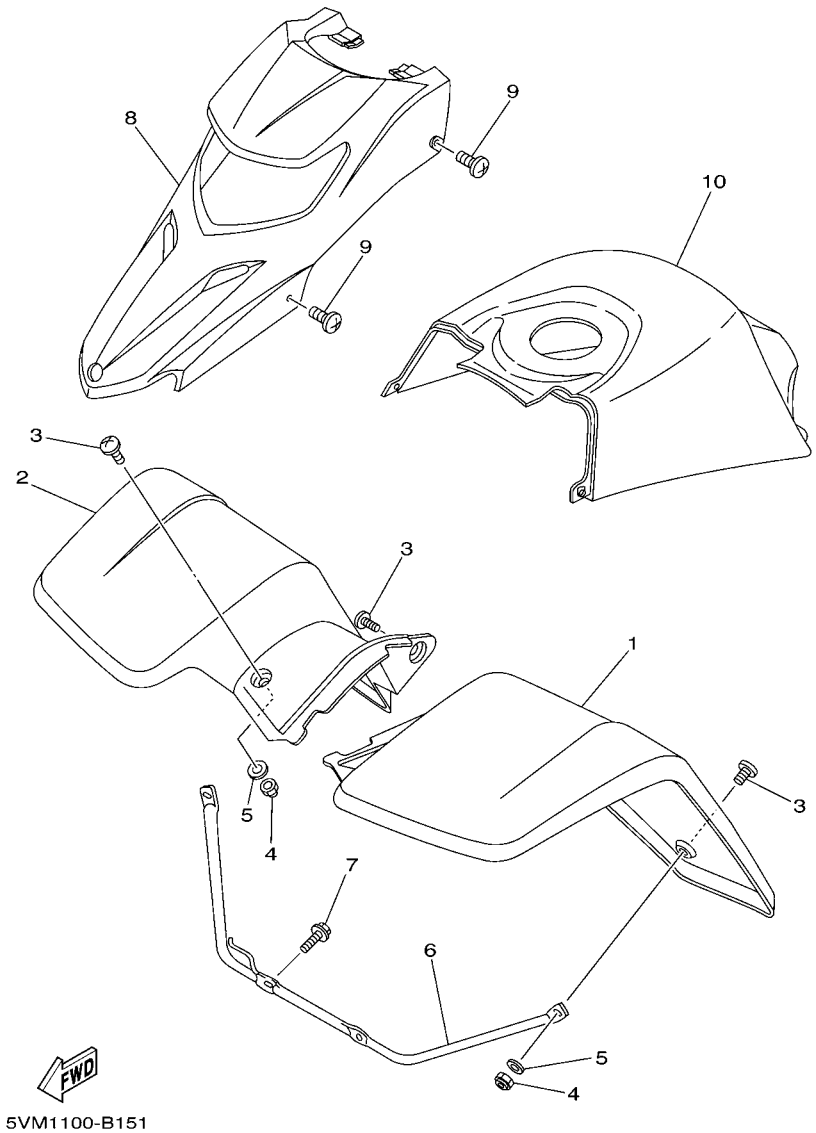

FIG. 15 FRONT FENDER

REF. NO.	PART NO.	DESCRIPTION	CAN	EUR	OCE	JPN		REMARKS
1	2XJ–W2151–D1	FRONT FENDER COMP.	1					
	2XJ–W215B–D1	FRONT FENDER COMP. 2		1				
	2XJ–W215E–D1	FRONT FENDER COMP.			1	1		
2	2XJ–W215D–D0	FRONT FENDER COMP. 2	1					
	2XJ–21556–D0	FENDER, FRONT 2		1	1	1		
3	90149–06306	SCREW	6	6	6	6		
4	95602–06100	NUT, U	4	4	4	4		
5	92902–06200	WASHER	4	4	4	4		
6	2XJ–21513–01	STAY, FENDER 1	1	1	1	1		
7	95822–06012	BOLT, FLANGE	2	2	2	2		
8	5VM–23391–20	PANEL, FRONT	1	1	1	1		
9	90154–05002	SCREW, BINDING	4	4	4	4		
10	2XJ–2171A–E0	COVER, TOP	1	1	1	1		

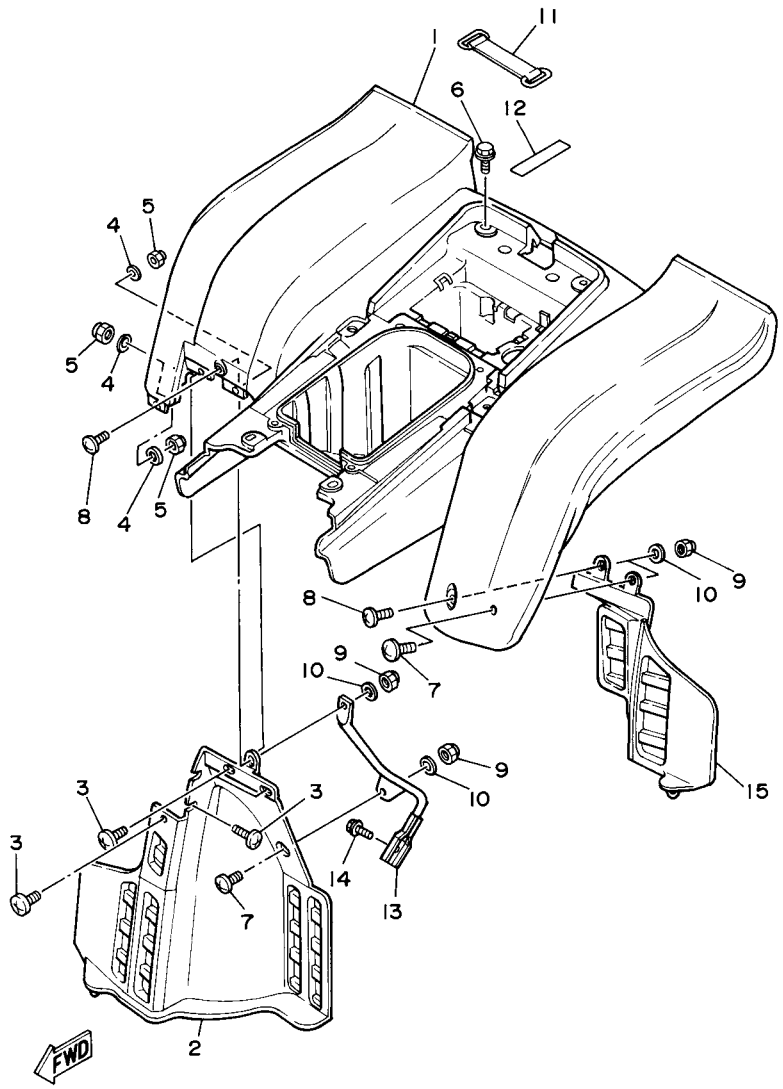

FIG. 16 REAR FENDER

REF. NO.	PART NO.	DESCRIPTION	CAN	EUR	OCE	JPN		REMARKS
1	2XJ–W216C–T1	REAR FENDER COMP.2	1					
	2XJ–W216B–T1	REAR FENDER COMP.2		1				
	2XJ–W2161–T1	REAR FENDER COMP.			1	1		
2	3JM–21621–00	FLAP	1	1	1	1		
3	90154–05005	SCREW, BINDING	5	5	5	5		
4	92902–05200	WASHER	5	5	5	5		
5	95602–05100	NUT, U	5	5	5	5		
6	90119–06056	BOLT, WITH WASHER	6	6	6	6		
7	90149–06306	SCREW	2	2	2	2		
8	90150–06037	SCREW, ROUND HEAD	2	2	2	2		
9	95602–06100	NUT, U	4	4	4	4		
10	92902–06200	WASHER	4	4	4	4		
11	2T4–82131–00	BAND, BATTERY	1	1	1	1		
12	93210–61750	O-RING	1	1	1	1		
13	2XJ–21614–00	STAY, FENDER 2	1	1	1	1		
14	92012–08012	BOLT, BUTTON HEAD	1	1	1	1		
15	3JM–21691–00	FLAP	1	1	1	1		

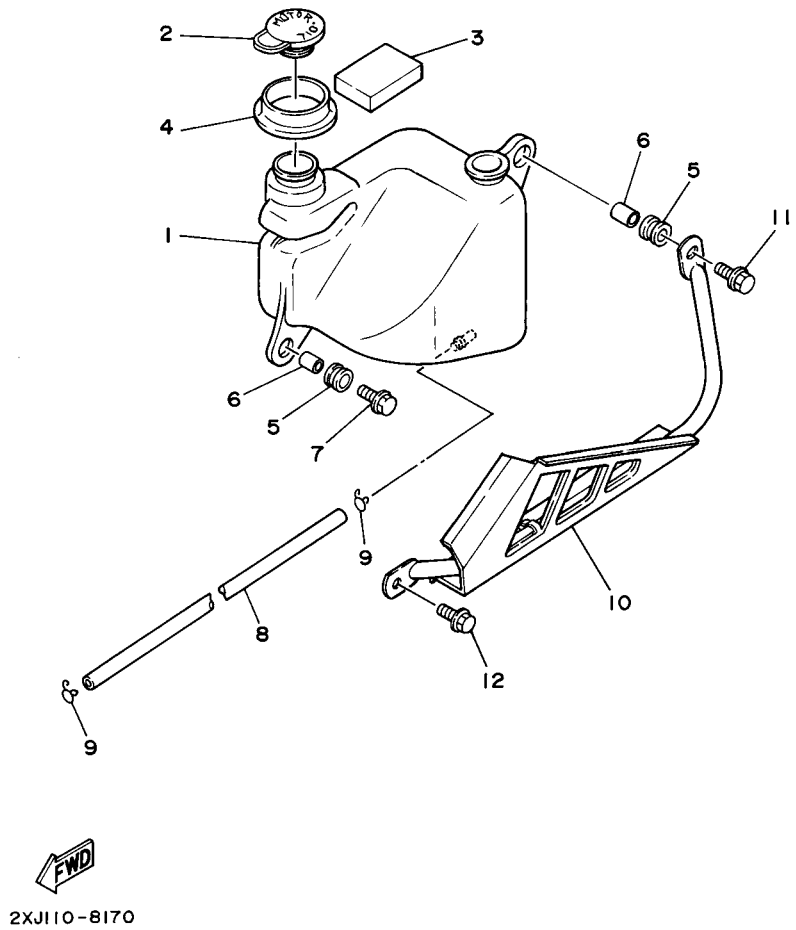

FIG. 17 OIL TANK

REF. NO.	PART NO.	DESCRIPTION	CAN	EUR	OCE	JPN		REMARKS
1	2XJ–21751–01	TANK, OIL	1	1	1	1		
2	2N3–21771–01	BODY, CAP	1	1	1	1		
3	2XJ–21746–00	DAMPER	1	1	1	1		
4	90480–48493	GROMMET	1	1	1	1		
5	90480–13238	GROMMET	2	2	2	2		
6	90387–07391	COLLAR	2	2	2	2		
7	95827–06025	BOLT, FLANGE	1	1	1	1		
8	90445–084J3	HOSE (L870)	1	1	1	1		
9	90467–08075	CLIP	2	2	2	2		
10	2XJ–2172W–00	COVER	1	1	1	1		
11	95827–06025	BOLT, FLANGE	1	1	1	1		
12	95827–06025	BOLT, FLANGE	1	1	1	1		

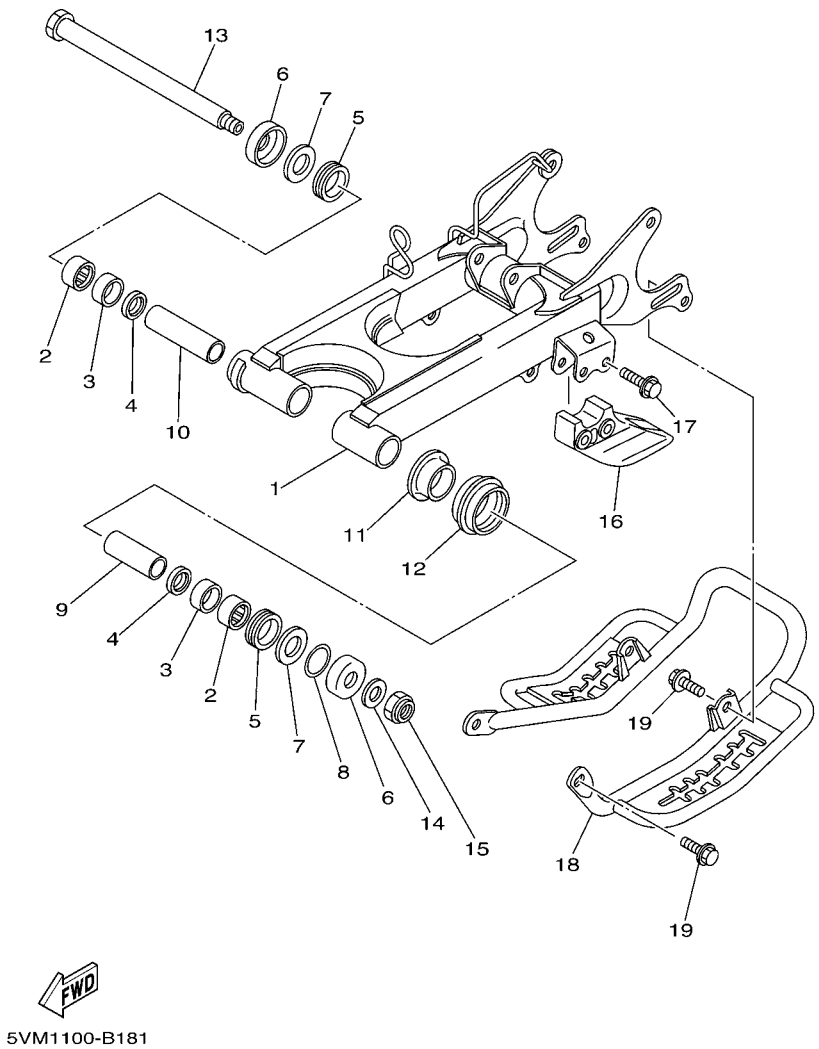

FIG. 18 REAR ARM

REF. NO.	PART NO.	DESCRIPTION	CAN	EUR	OCE	JPN		REMARKS
1	5VM–22110–10	REAR ARM COMP.	1	1	1	1		
2	93317–22237	BEARING	2	2	2	2		
3	90380–22111	BUSH, SOLID	2	2	2	2		
4	93106–22019	OIL SEAL (DC 22-28-8)	2	2	2	2		
5	93108–35004	OIL SEAL (35-41-8)	2	2	2	2		
6	2K6–22128–01	COVER, THRUST 1	2	2	2	2		
7	90201–244A9	WASHER, PLATE (2.05T)	2	2	2	2		
8	156–22127–00	SHIM (0.3T)	1	1	1	1		
9	2XJ–22123–00	BUSH 1	1	1	1	1		
10	2XJ–22124–00	BUSH 2	1	1	1	1		
11	2GU–22155–00	PIPE	1	1	1	1		
12	2GU–22151–10	SEAL, GUARD	1	1	1	1		
13	2JN–22141–00	SHAFT, PIVOT	1	1	1	1		
14	90201–14215	WASHER, PLATE	1	1	1	1		
15	90185–14070	NUT, SELF-LOCKING	1	1	1	1		
16	38W–22199–00	SUPPORT, CHAIN	1	1	1	1		
17	95807–08040	BOLT, FLANGE	2	2	2	2		
18	2XJ–2219X–00	COVER	1	1	1	1		
19	95822–08012	BOLT, FLANGE	4	4	4	4		

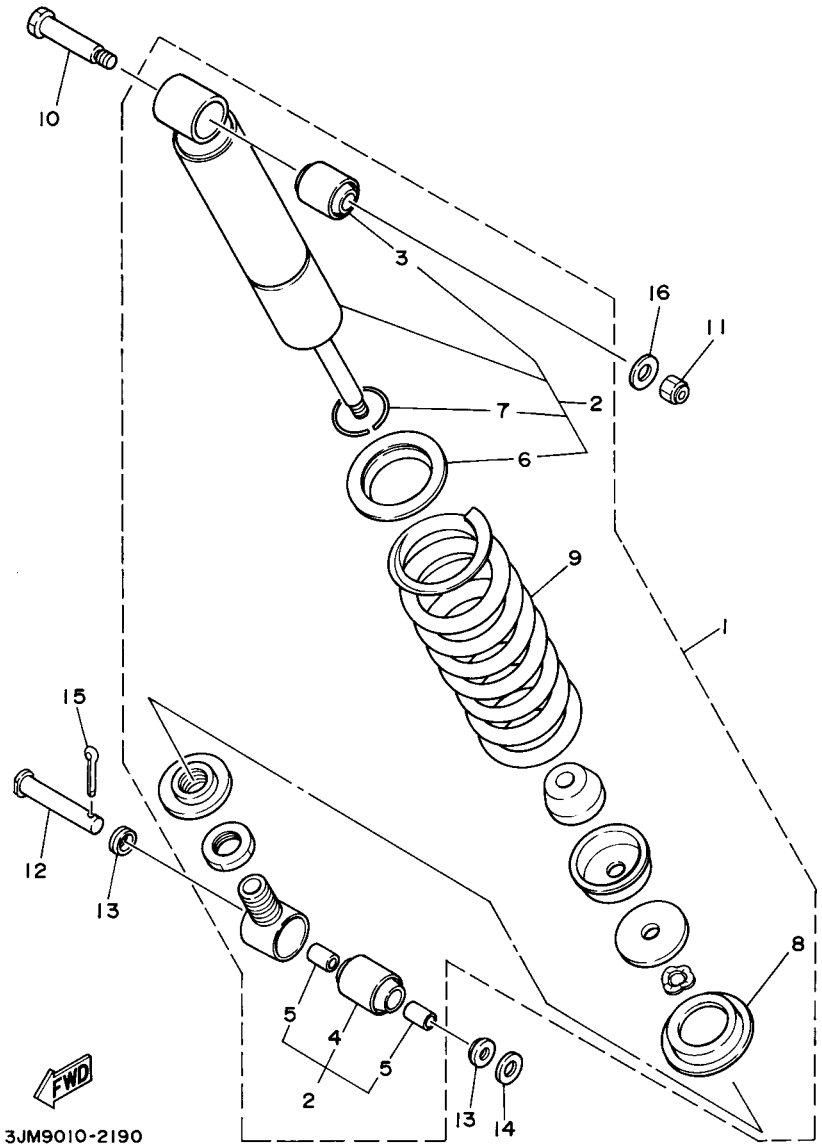

FIG. 19 REAR SUSPENSION

REF. NO.	PART NO.	DESCRIPTION	CAN	EUR	OCE	JPN		REMARKS
1	2XJ–22210–20–36	SHOCK ABSORBER ASSY, REAR	1					WW FOR BWS1
	2XJ–22210–40–36	SHOCK ABSORBER ASSY, REAR		1	1			WW FOR BWS1
	2XJ–22210–30–36	SHOCK ABSORBER ASSY, REAR				1		WW FOR BWS1
2	2XJ–22201–20	.DAMPER SUB ASSY	1					
	2XJ–22201–40	.DAMPER SUB ASSY		1	1			
	2XJ–22201–30	DAMPER SUB ASSY				1		
3	1NU–22216–00	..BUSH, REAR SHOCK ABSORBER	1	1	1	1		
4	1NU–22226–00	..BUSH, SHOCK ABSORBER LOWER	1	1	1	1		
5	90380–12051	..BUSH, SOLID	2	2	2	2		
6	22W–22223–00	..SEAT, SPRING LOWER	1	1	1	1		
7	93440–42101	..CIRCLIP	1	1	1	1		
8	3P6–22214–00	.GUIDE, SPRING 1	1	1	1	1		
9	2XJ–22212–00–36	.SPRING	1	1	1	1		WW FOR BWS1
10	90109–10736	BOLT	1	1	1	1		
11	95607–10100	NUT, U	1	1	1	1		
12	90240–12092	PIN, CLEVIS	1	1	1	1		
13	1W1–22128–00	COVER, THRUST 1	2	2	2	2		
14	92907–12600	WASHER, PLATE	1	1	1	1		
15	91401–30025	PIN, SPLIT	1	1	1	1		
16	90201–10126	WASHER, PLATE	1	1	1	1		

FIG. 20 STEERING

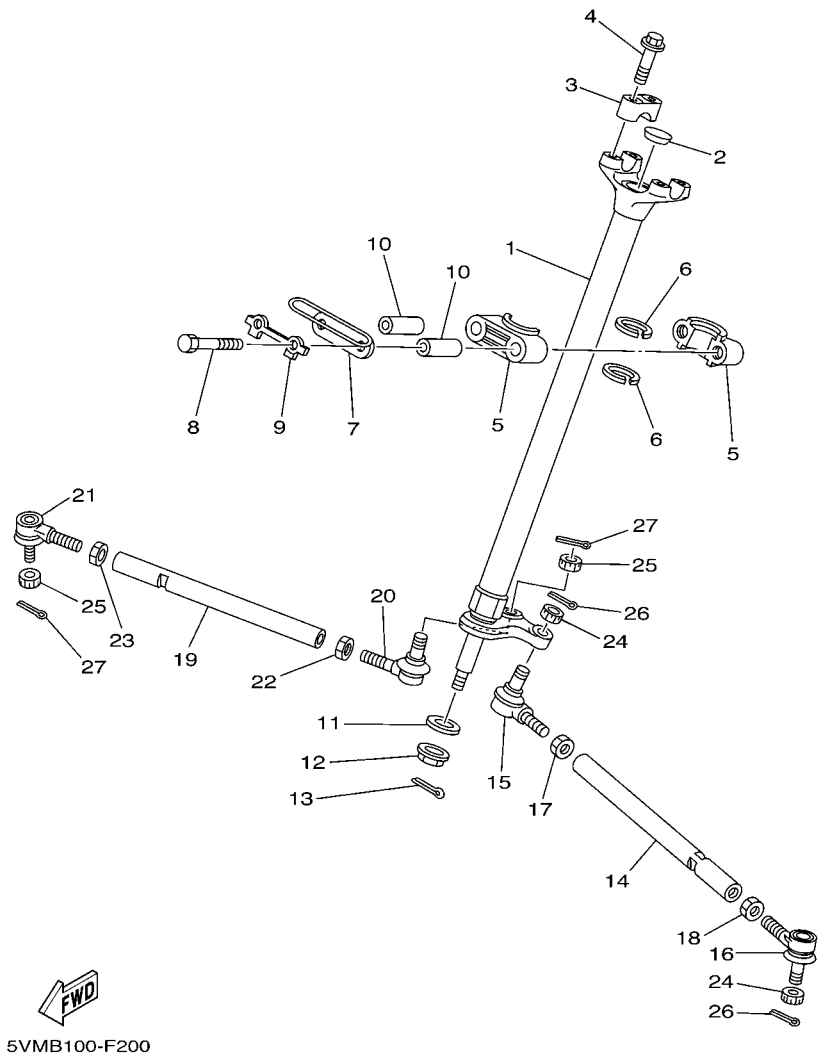

REF. NO.	PART NO.	DESCRIPTION	CAN	EUR	OCE	JPN		REMARKS
1	5VM–23813–10	COLUMN, STEERING 2	1	1	1	1		
2	90336–28053	PLUG, TAPER	1	1	1	1		
3	8K1–23814–00	HOLDER, HANDLE	2	2	2	2		
4	95827–08035	BOLT, FLANGE	4	4	4	4		
5	1UY–23812–00	PLANE BEARING, STEERING	2	2	2	2		
6	93112–31011	OIL SEAL	2	2	2	2		
7	5VM–23868–00	BRACKET, STEERING LOWER	1	1	1	1		
8	97022–08060	BOLT	2	2	2	2		
9	1UY–23894–01	WASHER, LOCK 1	1	1	1	1		
10	90387–090R0	COLLAR	2	2	2	2		
11	90201–10774	WASHER, PLATE	1	1	1	1		
12	90185–10115	NUT, SELF-LOCKING	1	1	1	1		
13	91401–20020	PIN, COTTER	1	1	1	1		
14	2XJ–23831–01	ROD, TIE	1	1	1	1		
15	1UY–23841–01	JOINT, UNIVERSAL 1	1	1	1	1		
16	1UY–23845–01	JOINT, UNIVERSAL 2	1	1	1	1		
17	95307–10700	NUT	1	1	1	1		
18	90170–10186	NUT	1	1	1	1		(L.H. THREAD)
19	2XJ–23831–01	ROD, TIE	1	1	1	1		
20	1UY–23841–01	JOINT, UNIVERSAL 1	1	1	1	1		
21	1UY–23845–01	JOINT, UNIVERSAL 2	1	1	1	1		
22	95307–10700	NUT	1	1	1	1		
23	90170–10186	NUT	1	1	1	1		(L.H. THREAD)
24	90171–10001	NUT, CASTLE	2	2	2	2		
25	90171–10001	NUT, CASTLE	2	2	2	2		
26	91401–20020	PIN, COTTER	2	2	2	2		
27	91401–20020	PIN, COTTER	2	2	2	2		

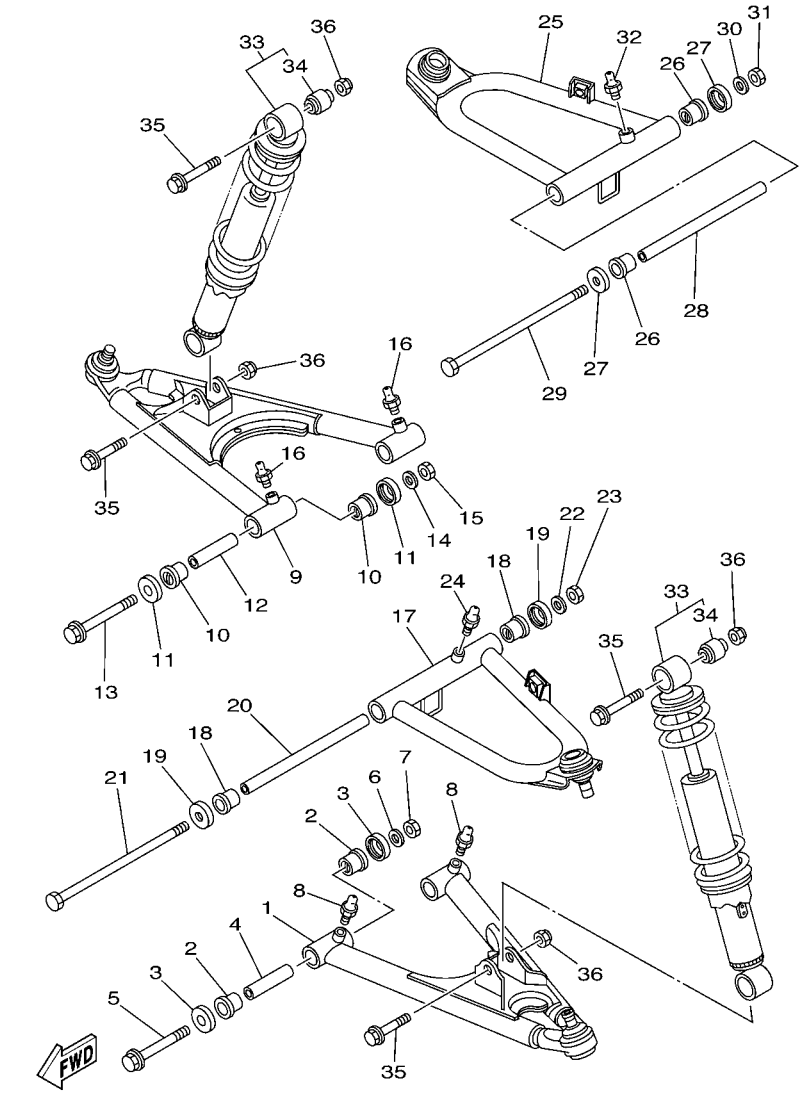

5VM1100-B210

FIG. 21 FRONT SUSPENSION & WHEEL

REF. NO.	PART NO.	DESCRIPTION	CAN	EUR	OCE	JPN		REMARKS
1	3JM–23570–00–P0	FRONT LOWER ARM COMP. (LEFT)	1	1	1	1		S8 FOR BWS1
2	90381–15088	BUSH, SOLID	4	4	4	4		
3	5YT–23517–00	COVER, THRUST 1	4	4	4	4		
4	90387–101R3	COLLAR	2	2	2	2		
5	90105–10135	BOLT, FLANGE	2	2	2	2		
6	90201–10037	WASHER, PLATE	2	2	2	2		
7	90185–10012	NUT, SELF-LOCKING	2	2	2	2		
8	93700–06004	NIPPLE, GREASE	2	2	2	2		
9	3JM–23580–00–P0	FRONT LOWER ARM COMP. (RIGHT)	1	1	1	1		S8 FOR BWS1
10	90381–15088	BUSH, SOLID	4	4	4	4		
11	5YT–23517–00	COVER, THRUST 1	4	4	4	4		
12	90387–101R3	COLLAR	2	2	2	2		
13	90105–10135	BOLT, FLANGE	2	2	2	2		
14	90201–10037	WASHER, PLATE	2	2	2	2		
15	90185–10012	NUT, SELF-LOCKING	2	2	2	2		
16	93700–06004	NIPPLE, GREASE	2	2	2	2		
17	5VM–23540–10	FRONT UPPER ARM COMP. (LEFT)	1	1	1	1		
18	90381–15088	BUSH, SOLID	2	2	2	2		
19	5YT–23517–00	COVER, THRUST 1	2	2	2	2		
20	90387–101U6	COLLAR	1	1	1	1		
21	336–22141–00	SHAFT, PIVOT	1	1	1	1		
22	90201–10037	WASHER, PLATE	1	1	1	1		
23	90185–10012	NUT, SELF-LOCKING	1	1	1	1		
24	93700–06004	NIPPLE, GREASE	1	1	1	1		
25	5VM–23550–10	FRONT UPPER ARM COMP. (RIGHT)	1	1	1	1		
26	90381–15088	BUSH, SOLID	2	2	2	2		
27	5YT–23517–00	COVER, THRUST 1	2	2	2	2		

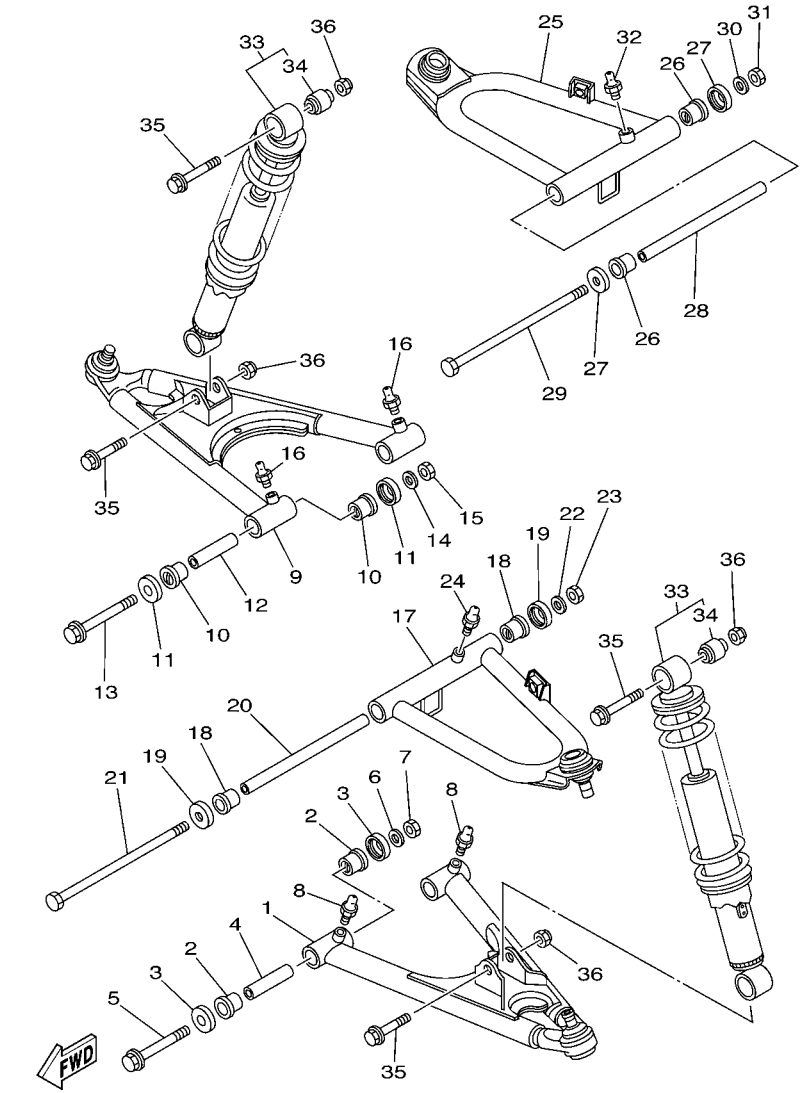

FIG. 21 FRONT SUSPENSION & WHEEL

REF. NO.	PART NO.	DESCRIPTION	CAN	EUR	OCE	JPN		REMARKS
28	90387–101U6	COLLAR	1	1	1	1		
29	336–22141–00	SHAFT, PIVOT	1	1	1	1		
30	90201–10037	WASHER, PLATE	1	1	1	1		
31	90185–10012	NUT, SELF-LOCKING	1	1	1	1		
32	93700–06004	NIPPLE, GREASE	1	1	1	1		
33	2XJ–23350–20–36	SHOCK ABSORBER ASSY	2	2	2	2		WW FOR BWS1
34	2XJ–2331R–00	.DAMPER, BUSH B	1	1	1	1		
35	90105–10131	BOLT, FLANGE	4	4	4	4		
36	90185–10012	NUT, SELF-LOCKING	4	4	4	4		

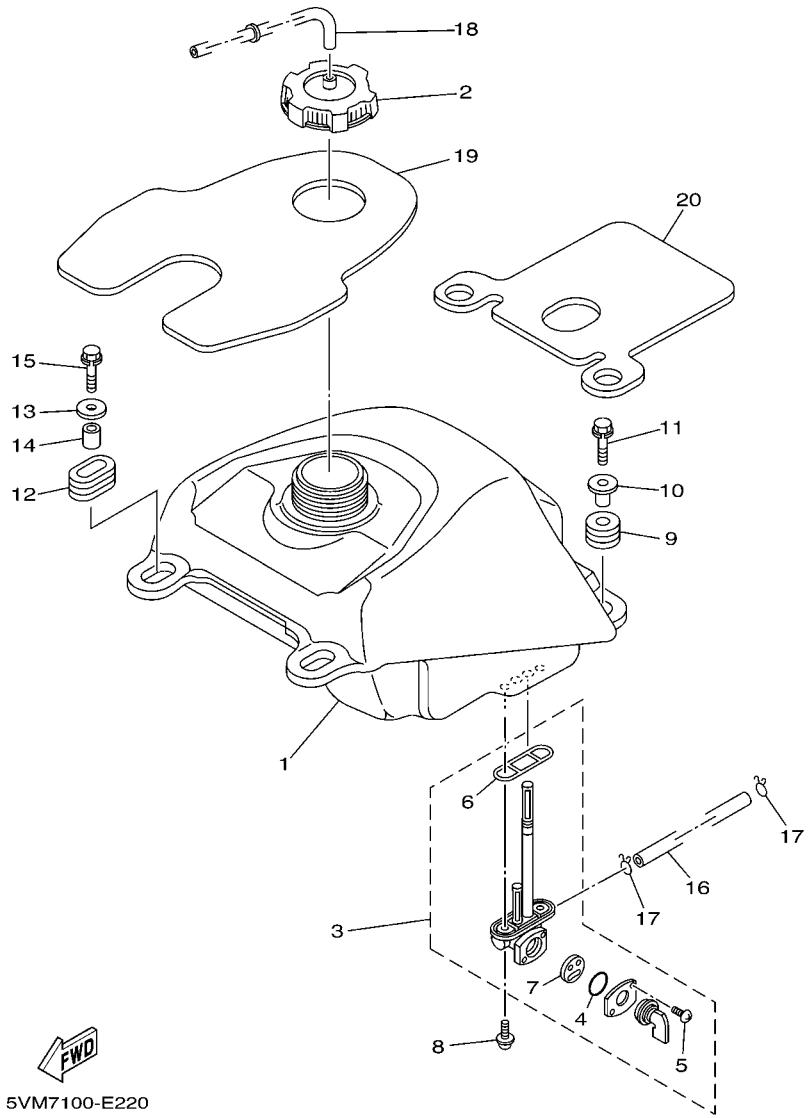

FIG. 22 FUEL TANK

REF. NO.	PART NO.	DESCRIPTION	CAN	EUR	OCE	JPN		REMARKS
1	2XJ–24110–00	FUEL TANK COMP.	1	1	1	1		
2	5KM–24610–00	CAP ASSY	1	1	1	1		
3	55W–24500–02	FUEL COCK ASSY 1	1	1	1	1		
4	3AJ–24534–01	.SEAL, COCK	1	1	1	1		
5	98507–03008	.SCREW, PAN HEAD	2	2	2	2		
6	4X8–24512–00	.O-RING	1	1	1	1		
7	3AC–24523–00	.VALVE PACKING	1	1	1	1		
8	90149–06108	SCREW	2	2	2	2		
9	90480–18290	GROMMET	2	2	2	2		
10	90387–066H4	COLLAR	2	2	2	2		
11	90119–06073	BOLT, WITH WASHER	2	2	2	2		
12	90480–01400	GROMMET	2	2	2	2		
13	90201–060L5	WASHER, PLATE	2	2	2	2		
14	90387–07598	COLLAR	2	2	2	2		
15	90119–06073	BOLT, WITH WASHER	2	2	2	2		
16	90445–100E9	HOSE (L155)	1	1	1	1		
17	90467–09006	CLIP	2	2	2	2		
18	90445–08013	HOSE (L340)	1	1	1	1		
19	2XJ–2414H–01	DAMPER, PLATE 1	1	1	1	1		
20	3JM–2414J–00	DAMPER, PLATE 2	1	1	1	1		

FIG. 23 SEAT

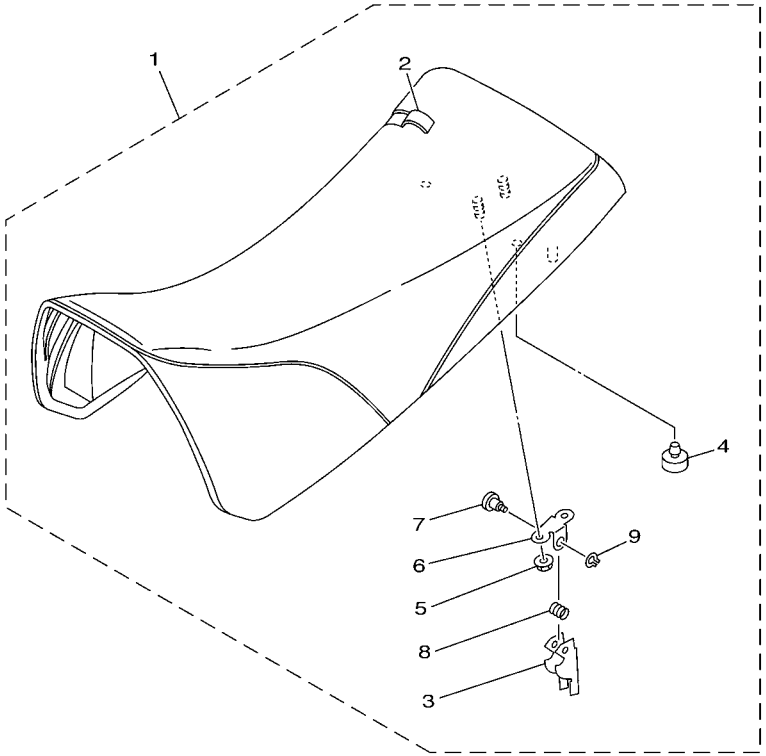

5KJ7100-2230

REF. NO.	PART NO.	DESCRIPTION	CAN	EUR	OCE	JPN		REMARKS
1	5KJ–24710–C0	SINGLE SEAT ASSY	1	1	1	1		
2	5KJ–2470F–C0	.SEAT COVER COMP.	1	1	1	1		
3	29U–24776–00	.LEVER, SEAT	1	1	1	1		
4	371–27114–00	.STOPPER, MAIN STAND	2	2	2	2		
5	95707–06500	.NUT, FLANGE	4	4	4	4		
6	4K0–24775–00	.BRACKET, SEAT LEVER	1	1	1	1		
7	4K0–24774–01	.PIN	1	1	1	1		
8	90508–20779	.SPRING, TORSION	1	1	1	1		
9	93440–04002	.CIRCLIP	1	1	1	1		

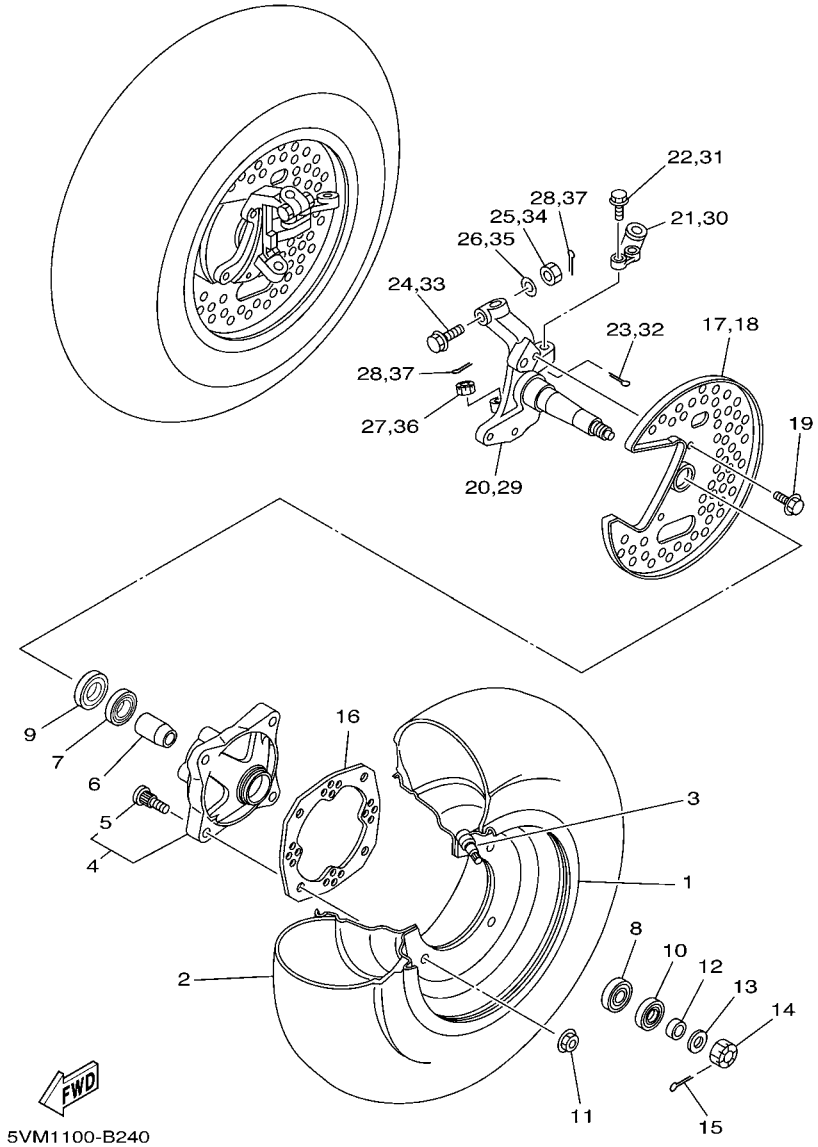

FIG. 24 FRONT WHEEL

REF. NO.	PART NO.	DESCRIPTION	CAN	EUR	OCE	JPN		REMARKS
1	2XJ–25180–00–35	WHEEL COMP.	2	2	2	2		SL FOR BWS1
2	94107–105W8	TIRE (AT21X7-10**C-873 T/L)	2	2	2	2		UR CHENG SHIN
	94107–100X3	TIRE (AT21X7-10**KT851A T/L N)	2	2	2	2		UR DUNLOP
3	93900–00022	VALVE, RIM (TR413)	2	2	2	2		TAIHEIYO
4	3GD–25111–01	HUB, FRONT	2	2	2	2		
5	90114–10007	.BOLT, SERRATION	4	4	4	4		
6	1UY–25117–00	SPACER, BEARING	2	2	2	2		
7	93306–00446	BEARING	2	2	2	2		
8	93306–20231	BEARING	2	2	2	2		
9	93105–26026	OIL SEAL	2	2	2	2		
10	93102–22216	OIL SEAL	2	2	2	2		
11	95707–10500	NUT, FLANGE	8	8	8	8		
12	90387–150R1	COLLAR	2	2	2	2		
13	90201–14586	WASHER, PLATE	2	2	2	2		
14	90171–14002	NUT, CASTLE	2	2	2	2		
15	91401–30025	PIN, SPLIT	2	2	2	2		
16	1S3–25127–00	COVER, PLATE	2	2	2	2		
17	3GD–2514A–10	RING, WHEEL 1 (LEFT)	1	1	1	1		
18	3GD–2515A–10	RING, WHEEL 2 (RIGHT)	1	1	1	1		
19	95802–06010	BOLT, FLANGE	4	4	4	4		
20	5VM–23511–00	KNUCKLE, STEERING 1	1	1	1	1		
21	2XJ–23512–01	ARM, KNUCKLE 1	1	1	1	1		
22	90105–10507	BOLT, FLANGE	2	2	2	2		
23	91401–20020	PIN, COTTER	2	2	2	2		
24	90105–10549	BOLT, FLANGE	1	1	1	1		
25	95337–10600	NUT	1	1	1	1		
26	90201–10430	WASHER, PLATE	1	1	1	1		

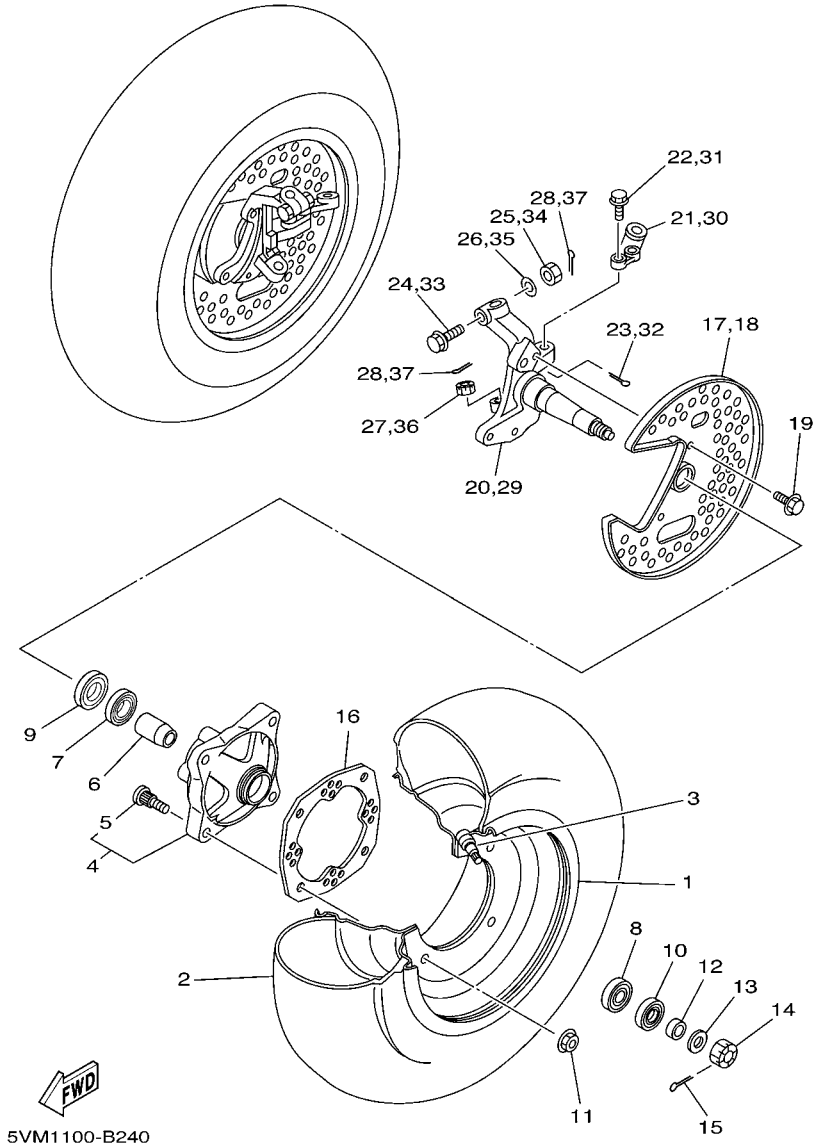

FIG. 24 FRONT WHEEL

REF. NO.	PART NO.	DESCRIPTION	CAN	EUR	OCE	JPN		REMARKS
27	90171–10046	NUT, CASTLE	1	1	1	1		
28	91401–20020	PIN, COTTER	2	2	2	2		
29	5VM–23521–00	KNUCKLE, STEERING 2	1	1	1	1		
30	2XJ–23522–01	ARM, KNUCKLE 2	1	1	1	1		
31	90105–10507	BOLT, FLANGE	2	2	2	2		
32	91401–20020	PIN, COTTER	2	2	2	2		
33	90105–10549	BOLT, FLANGE	1	1	1	1		
34	95337–10600	NUT	1	1	1	1		
35	90201–10430	WASHER, PLATE	1	1	1	1		
36	90171–10046	NUT, CASTLE	1	1	1	1		
37	91401–20020	PIN, COTTER	2	2	2	2		

FIG. 25 FRONT BRAKE CALIPER

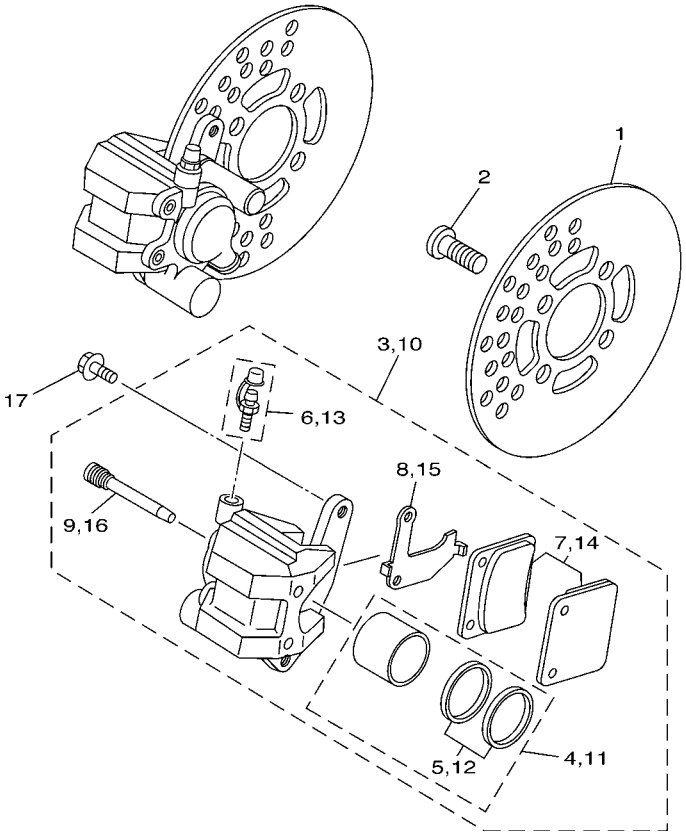

5VM1100-B250

REF. NO.	PART NO.	DESCRIPTION	CAN	EUR	OCE	JPN		REMARKS
1	3GD–2582T–10	DISC, BRAKE (LEFT)	2	2	2	2		
2	90149–08268	SCREW	8	8	8	8		
3	3GD–2580T–00	CALIPER ASSY (LEFT)	1	1	1	1		
4	3GD–W0057–00	.PISTON ASSY, CALIPER	1	1	1	1		
5	3GD–W0047–00	..CALIPER SEAL KIT	1	1	1	1		
6	1UY–W0048–50	.BLEED SCREW KIT	1	1	1	1		
7	3GD–W0045–00	.BRAKE PAD KIT	1	1	1	1		
8	3GD–25827–00	.SHIM, CALIPER	1	1	1	1		
9	3GD–25933–00	.PIN, PAD	2	2	2	2		
10	3GD–2580U–00	CALIPER ASSY (RIGHT)	1	1	1	1		
11	3GD–W0057–00	.PISTON ASSY, CALIPER	1	1	1	1		
12	3GD–W0047–00	..CALIPER SEAL KIT	1	1	1	1		
13	1UY–W0048–50	.BLEED SCREW KIT	1	1	1	1		
14	3GD–W0045–00	.BRAKE PAD KIT	1	1	1	1		
15	3GD–25828–00	.SHIM, CALIPER	1	1	1	1		
16	3GD–25933–00	.PIN, PAD	2	2	2	2		
17	90105–08538	BOLT, FLANGE	4	4	4	4		

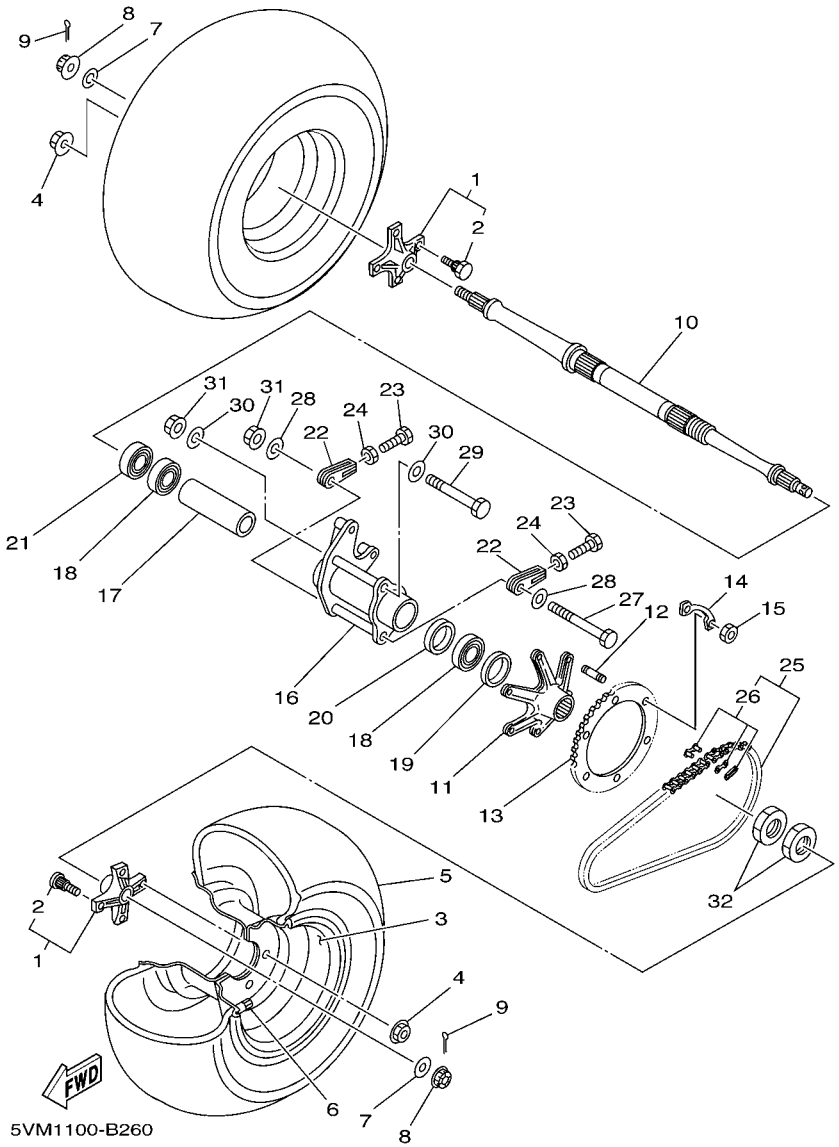

FIG. 26 REAR WHEEL

REF. NO.	PART NO.	DESCRIPTION	CAN	EUR	OCE	JPN		REMARKS
1	2XJ–25383–40	COLLAR, WHEEL	2	2	2	2		UR
	2XJ–25383–50	COLLAR, WHEEL	2	2	2	2		UR
2	90114–10010	.BOLT, SERRATION	4	4	4	4		
3	2VY–25390–00–35	REAR WHEEL COMP.	2	2	2	2		SL FOR BWS1
4	95707–10500	NUT, FLANGE	8	8	8	8		
5	94110–085W9	TIRE (AT21X10-8*KT895A T/L N)	2	2	2	2		UR DUNLOP
	94110–085W7	TIRE (AT21X10-8**C-874 T/L)	2	2	2	2		UR CHENG SHIN
6	93900–00022	VALVE, RIM (TR413)	2	2	2	2		TAIHEIYO
7	90201–14021	WASHER, PLATE	2	2	2	2		
8	90171–14004	NUT, CASTLE	2	2	2	2		
9	91401–30030	PIN, COTTER	2	2	2	2		
10	5VM–25381–10	AXLE, WHEEL	1	1	1	1		
11	2XJ–25386–00	COLLAR, SPROCKET AXLE	1	1	1	1		
12	90116–08507	BOLT, STUD	6	6	6	6		
13	2XJ–25440–21	SPROCKET, DRIVEN (40T)	1	1	1	1		
14	2XJ–25412–00	WASHER	3	3	3	3		
15	90170–08258	NUT	6	6	6	6		
16	5VM–25311–10	HUB, REAR	1	1	1	1		
17	2XJ–25317–00	SPACER, BEARING	1	1	1	1		
18	93306–00705	BEARING	2	2	2	2		
19	93102–42260	OIL SEAL	1	1	1	1		
20	90387–561U7	COLLAR	1	1	1	1		
21	93102–43341	OIL SEAL	1	1	1	1		
22	2XJ–25388–00	PULLER, CHAIN 1	2	2	2	2		
23	90101–08777	BOLT	2	2	2	2		
24	95307–08600	NUT	2	2	2	2		
25	94581–87092	CHAIN (DID520V)	1	1	1	1		

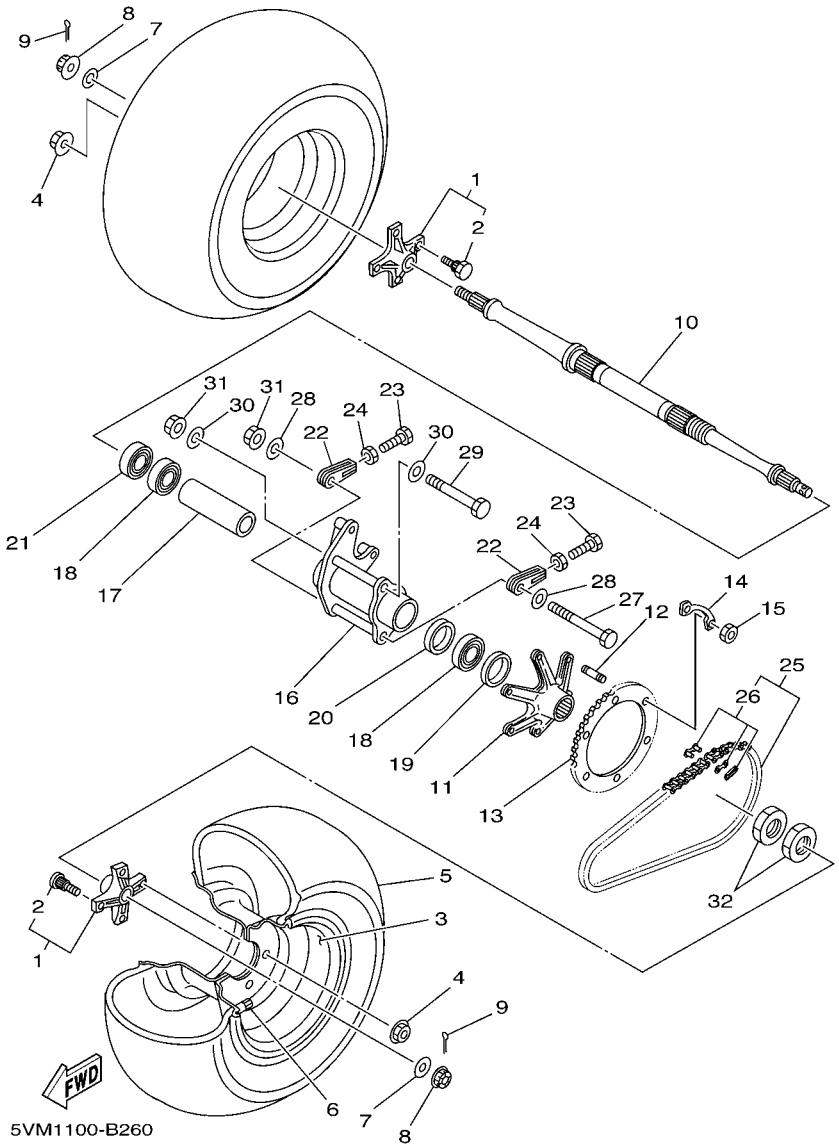

FIG. 26 REAR WHEEL

REF. NO.	PART NO.	DESCRIPTION	CAN	EUR	OCE	JPN		REMARKS
26	94681–87011	.JOINT, CHAIN (DID520V FJ)	1	1	1	1		
27	90101–10678	BOLT	1	1	1	1		
28	90201–106F2	WASHER, PLATE	2	2	2	2		
29	90101–10678	BOLT	1	1	1	1		
30	90201–106F2	WASHER, PLATE	2	2	2	2		
31	95707–10500	NUT, FLANGE	2	2	2	2		
32	90170–33376	NUT	2	2	2	2		

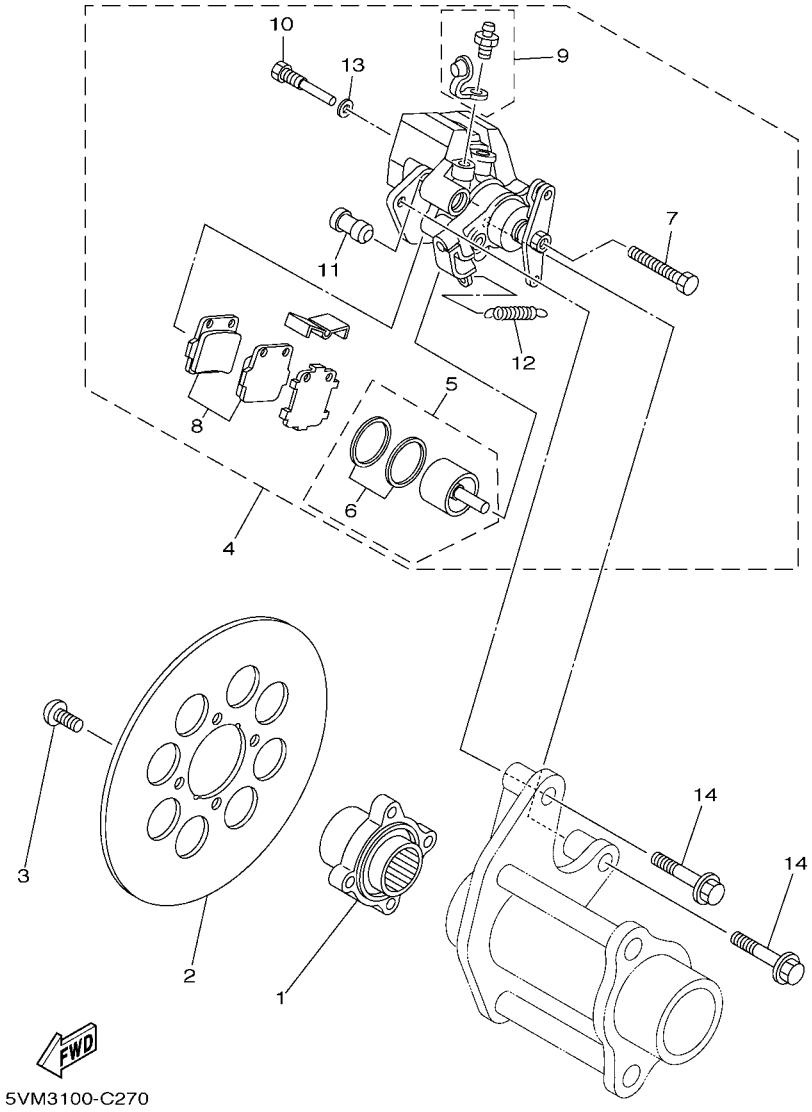

FIG. 27 REAR BRAKE CALIPER

REF. NO.	PART NO.	DESCRIPTION	CAN	EUR	OCE	JPN		REMARKS
1	2GU–25712–00	BRACKET, DISC	1	1	1	1		
2	5FK–2582W–00	DISK, REAR BRAKE 2	1	1	1	1		
3	90109–081F0	BOLT	4	4	4	4		
4	5LP–2580W–10	CALIPER ASSY, REAR 2	1	1	1	1		
5	5LP–W0057–50	.PISTON ASSY, CALIPER	1	1	1	1		
6	5LP–W0047–50	..CALIPER SEAL KIT	1	1	1	1		
7	1UY–25972–51	.ADJUSTBOLT	1	1	1	1		
8	5LP–W0046–50	.BRAKE PAD KIT 2	1	1	1	1		
9	1UY–W0048–50	.BLEED SCREW KIT	1	1	1	1		
10	1UY–25924–51	.PIN, PAD	2	2	2	2		
11	1UY–25917–51	.BOOT, CALIPER	2	2	2	2		
12	1UY–25977–51	.SPRING, RETURN	1	1	1	1		
13	1UY–25933–51	.WASHER, PAD PIN	2	2	2	2		
14	90105–08211	BOLT, FLANGE	2	2	2	2		

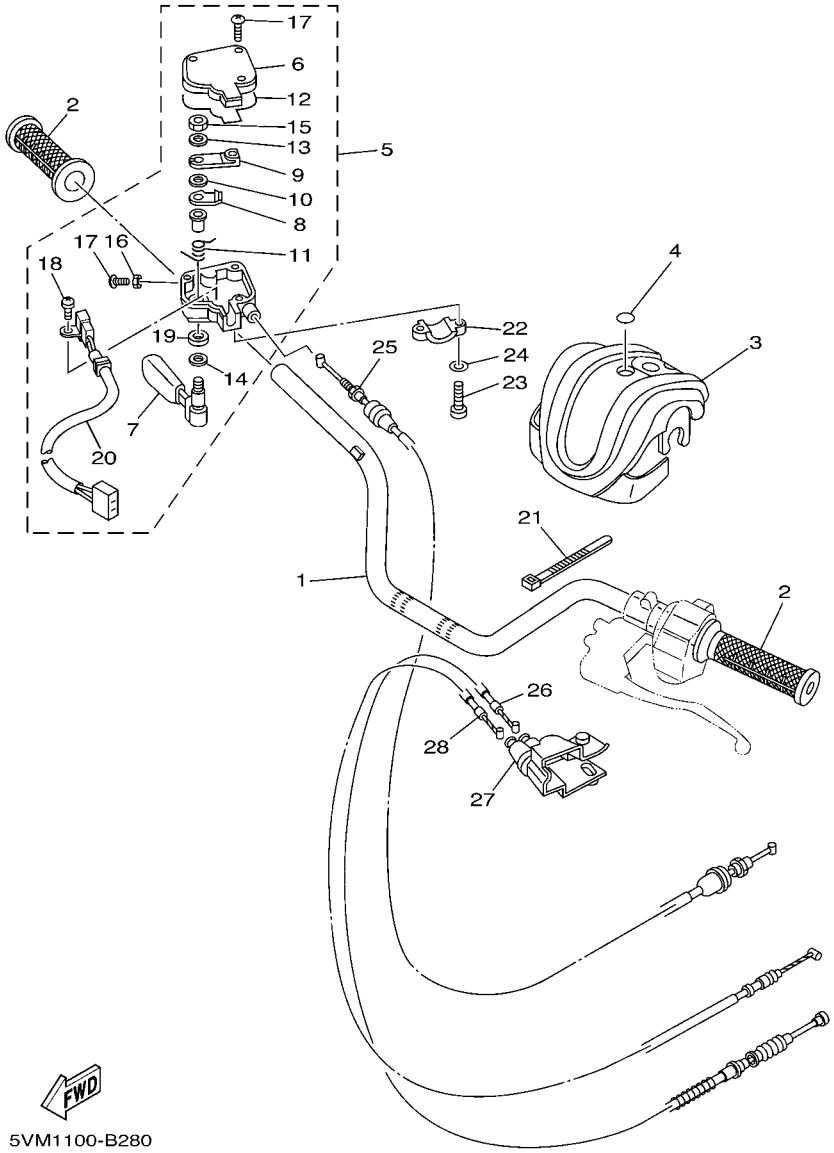

FIG. 28 STEERING HANDLE & CABLE

REF. NO.	PART NO.	DESCRIPTION	CAN	EUR	OCE	JPN		REMARKS
1	5LP–26111–20	HANDLEBAR	1	1	1	1		
2	5LP–26241–00	GRIP	2	2	2	2		
3	5TH–26124–20	PROTECTOR, HANDLEBAR	1	1	1	1		
4	5GT–2836B–10	TUNING FORK MARK	1	1	1	1		
5	3GG–26250–30	THROTTLE LEVER ASSY	1	1	1	1		
6	2GU–2628F–20	.CAP, GEAR	1	1	1	1		
7	2GU–2625G–01	.LEVER, THROTTLE	1	1	1	1		
8	2GU–2625H–00	.ARM, THROTTLE	1	1	1	1		
9	2GU–2625J–00	.ARM, THROTTLE 2	1	1	1	1		
10	2GU–26259–00	.COLLAR	1	1	1	1		
11	2GU–26314–00	.SPRING	1	1	1	1		
12	2GU–2628G–00	.GASKET	1	1	1	1		
13	2GU–26398–00	.WASHER	1	1	1	1		
14	1NV–26129–00	.WASHER	1	1	1	1		
15	95607–05100	.NUT, U	1	1	1	1		
16	95307–05700	.NUT	1	1	1	1		
17	98507–05020	.SCREW, PAN HEAD	4	4	4	4		
18	98907–03006	.SCREW, BIND	1	1	1	1		
19	93104–09025	.OIL SEAL	1	1	1	1		
20	5TG–82567–00	.SWITCH, THROTTLE	1	1	1	1		
21	437–83936–01	BAND, SWITCH CORD	4	4	4	4		
22	4V4–82913–00	HOLDER, LEVER LOWER 1	1	1	1	1		
23	98502–05020	SCREW, PAN HEAD	2	2	2	2		
24	92902–05100	WASHER, SPRING	2	2	2	2		
25	5VM–26311–00	CABLE, THROTTLE 1	1	1	1	1		
26	5VM–26335–00	CABLE, CLUTCH	1	1	1	1		
27	1UY–2637A–01	COVER, HANDLE LEVER 2	1	1	1	1		

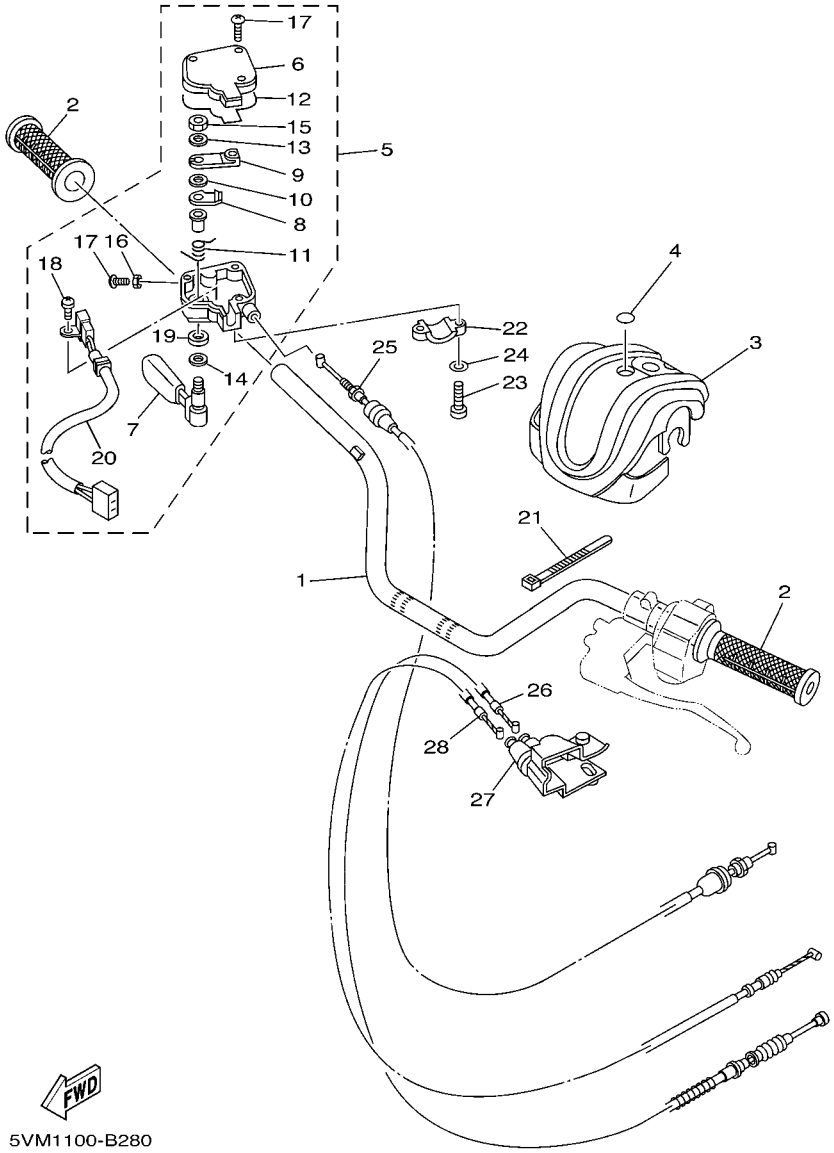

FIG. 28 STEERING HANDLE & CABLE

REF. NO.	PART NO.	DESCRIPTION	CAN	EUR	OCE	JPN		REMARKS
28	5VM–26341–00	CABLE, BRAKE	1	1	1	1		

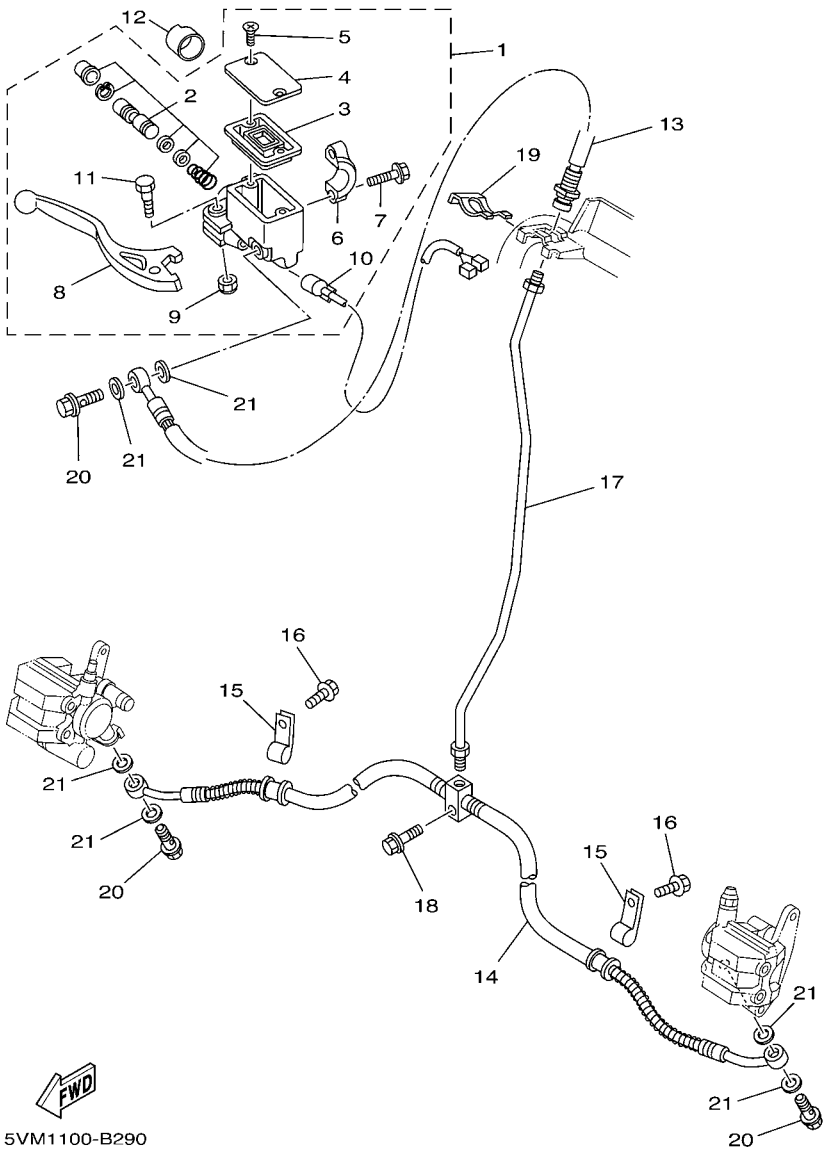

FIG. 29 FRONT MASTER CYLINDER

REF. NO.	PART NO.	DESCRIPTION	CAN	EUR	OCE	JPN		REMARKS
1	5LP–2583T–01	MASTER CYLINDER ASSY	1	1	1	1		
2	5LP–W0041–00	.CYLINDER KIT, MASTER	1	1	1	1		
3	4L0–25854–00	.DIAPHRAGM, RESERVOIR	1	1	1	1		
4	5LP–25852–01	.CAP, RESERVOIR	1	1	1	1		
5	4NK–2589H–00	.SCREW	2	2	2	2		
6	5LP–25867–00	.BRACKET, MASTER CYLINDER	1	1	1	1		
7	5MV–25833–00	.BOLT, FITTING	2	2	2	2		
8	5LP–83922–00	.LEVER 2	1	1	1	1		
9	95604–06100	.NUT, U	1	1	1	1		
10	5LP–83980–00	.FRONT STOP SWITCH ASSY	1	1	1	1		
11	5MV–2589F–00	.BOLT, LEVER	1	1	1	1		
12	1UY–26259–00	COLLAR	1	1	1	1		
13	5VM–25872–00	HOSE, BRAKE 1	1	1	1	1		
14	5VM–25873–00	HOSE, BRAKE 2	1	1	1	1		
15	5VM–25886–00	HOLDER, BRAKE HOSE	2	2	2	2		
16	95807–06016	BOLT, FLANGE	2	2	2	2		
17	5VM–25871–00	PIPE, BRAKE	1	1	1	1		
18	95827–06025	BOLT, FLANGE	1	1	1	1		
19	2GU–25866–00	CIRCLIP	1	1	1	1		
20	90401–10159	BOLT, UNION	3	3	3	3		
21	90201–10118	WASHER, PLATE	6	6	6	6		

FIG. 30 STAND & FOOTREST

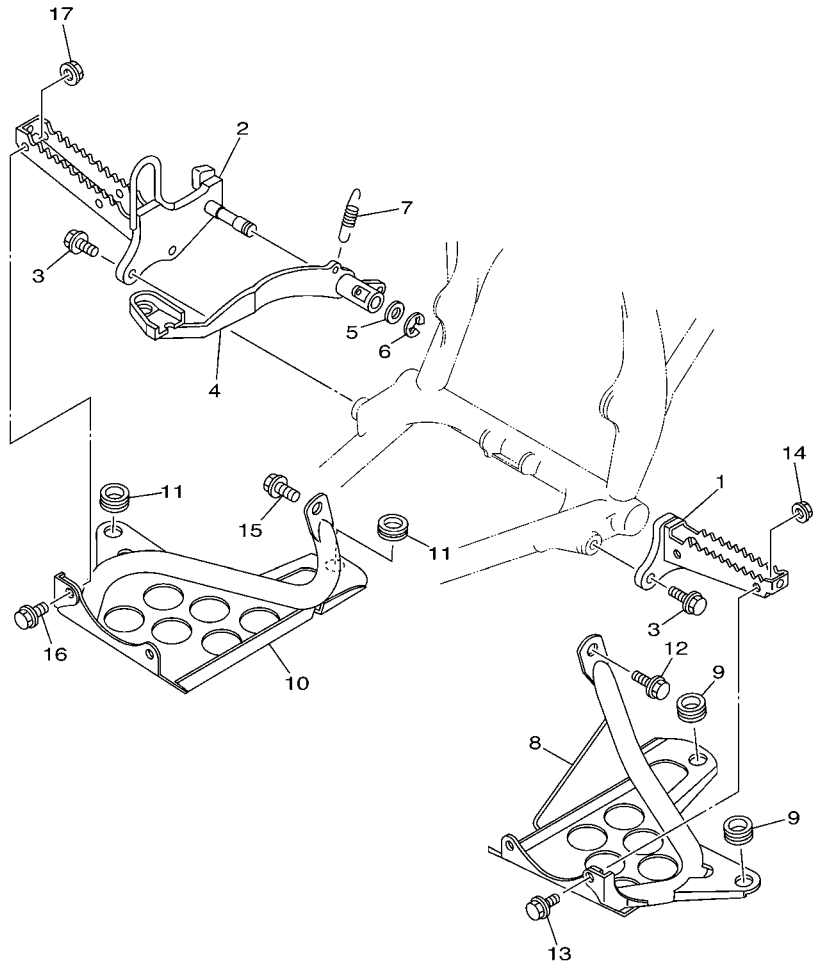

REF. NO.	PART NO.	DESCRIPTION	CAN	EUR	OCE	JPN		REMARKS
1	5KJ–27411–00	FOOTREST 1	1	1	1	1		
2	5VM–27421–00	FOOTREST 2	1	1	1	1		
3	95817–10025	BOLT, FLANGE	4	4	4	4		
4	5VM–27211–10	PEDAL, BRAKE	1	1	1	1		
5	90201–15018	WASHER, PLATE	1	1	1	1		
6	93430–12008	CIRCLIP	1	1	1	1		
7	90506–20380	SPRING, TENSION	1	1	1	1		
8	3JM–27445–00	PLATE 1	1	1	1	1		
9	90480–18411	GROMMET	2	2	2	2		
10	3JM–27446–00	PLATE 2	1	1	1	1		
11	90480–18411	GROMMET	2	2	2	2		
12	95827–08016	BOLT, FLANGE	1	1	1	1		
13	92017–08016	BOLT, BUTTON HEAD	2	2	2	2		
14	95707–08500	NUT, FLANGE	2	2	2	2		
15	95827–08016	BOLT, FLANGE	1	1	1	1		
16	92017–08016	BOLT, BUTTON HEAD	2	2	2	2		
17	95707–08500	NUT, FLANGE	2	2	2	2		

FIG. 31 REAR MASTER CYLINDER

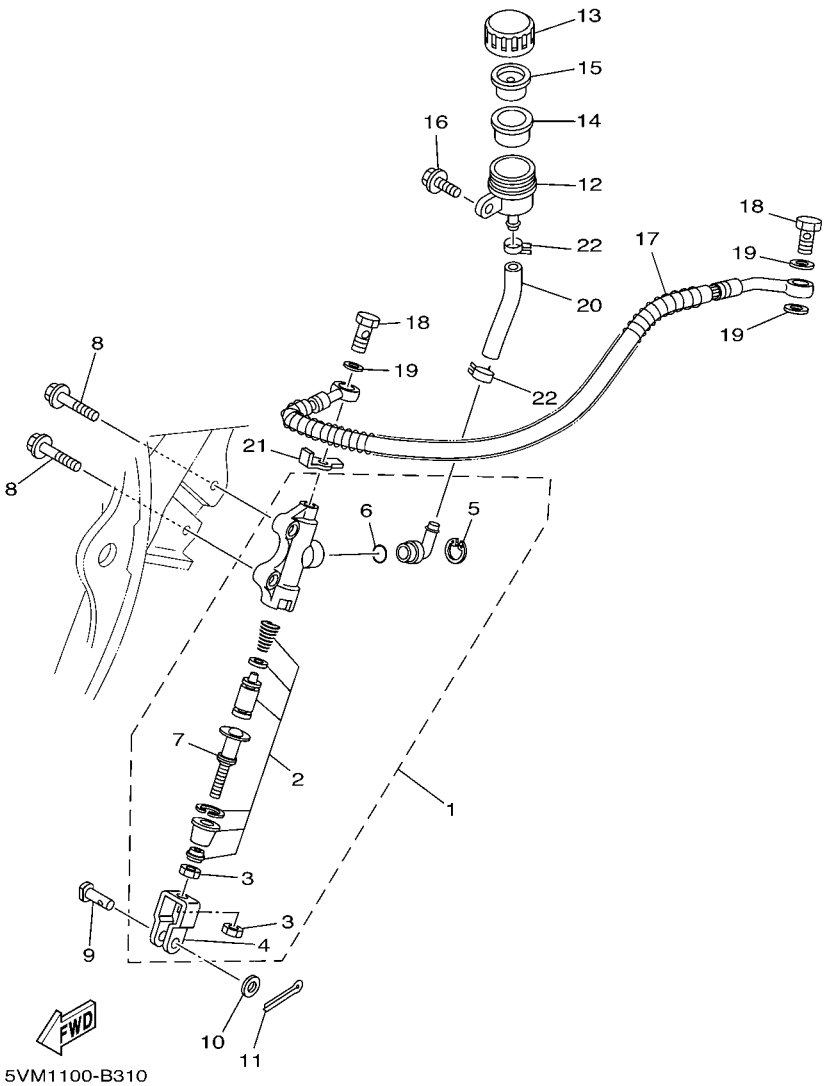

REF. NO.	PART NO.	DESCRIPTION	CAN	EUR	OCE	JPN		REMARKS
1	5VM–2583V–00	RR. MASTER CYLINDER ASSY.	1	1	1	1		
2	5VM–W0042–50	.CYLINDER KIT, MASTER	1	1	1	1		
3	95302–08600	.NUT	2	2	2	2		
4	2YK–27222–00	.JOINT	1	1	1	1		
5	2VN–25866–00	.CIRCLIP	1	1	1	1		
6	93210–15620	.O-RING	1	1	1	1		
7	3KW–27234–00	.PIN, BRAKE ROD	1	1	1	1		
8	95817–08020	BOLT, FLANGE	2	2	2	2		
9	90240–08005	PIN, CLEVIS	1	1	1	1		
10	90201–08066	WASHER, PLATE	1	1	1	1		
11	91401–16012	PIN, COTTER	1	1	1	1		
12	2VN–25894–00	TANK, RESERVOIR	1	1	1	1		
13	4PX–25852–00	CAP, RESERVOIR	1	1	1	1		
14	2VN–25854–00	DIAPHRAGM, RESERVOIR	1	1	1	1		
15	2VN–25855–00	BUSH,DIAPHRAGM	1	1	1	1		
16	95807–06016	BOLT, FLANGE	1	1	1	1		
17	5VM–25874–00	HOSE, BRAKE	1	1	1	1		
18	90401–10159	BOLT, UNION	2	2	2	2		
19	90201–10118	WASHER, PLATE	3	3	3	3		
20	5VM–25895–00	HOSE, RESERVOIR	1	1	1	1		
21	5LP–25844–00	WASHER, LOCK	1	1	1	1		
22	90467–11044	CLIP	2	2	2	2		

FIG. 32 GUARD

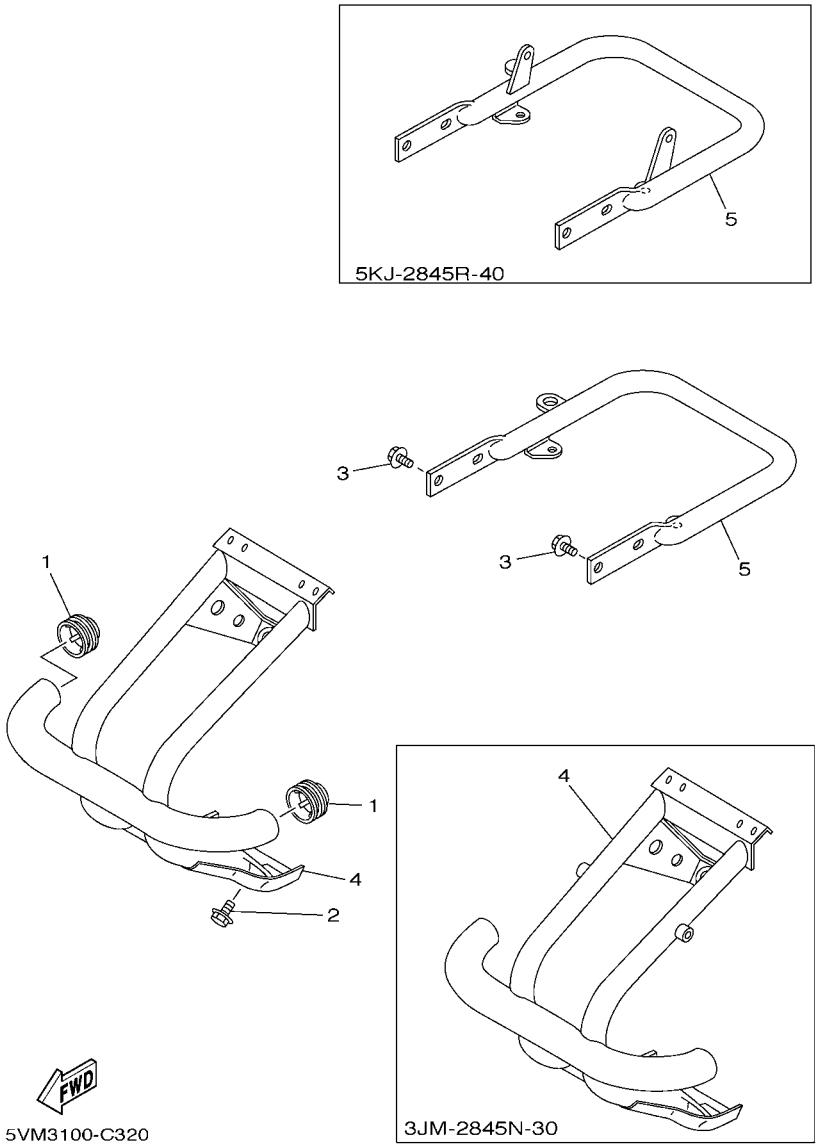

REF. NO.	PART NO.	DESCRIPTION	CAN	EUR	OCE	JPN		REMARKS
1	2HR–28415–00	DAMPER 1	2	2	2	2		
2	95812–08016	BOLT, FLANGE	3	3	3	3		
3	95812–08016	BOLT, FLANGE	3	3	3	3		
4	3JM–2845N–30	BAR, CARRY FRONT	1					
	3JM–2845N–20	BAR, CARRY FRONT		1	1	1		
5	5KJ–2845R–40	BAR, CARRY REAR	1					
	5KJ–2845R–30	BAR, CARRY REAR		1	1	1		

FIG. 33 GENERATOR

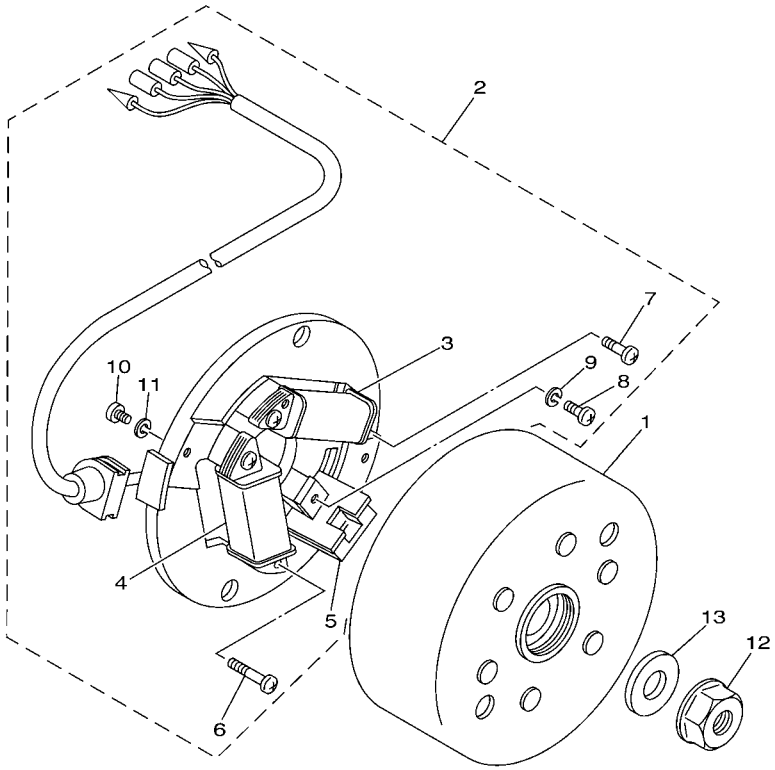

5VM1100-B330

REF. NO.	PART NO.	DESCRIPTION	CAN	EUR	OCE	JPN		REMARKS
1	2XJ–85550–M1	ROTOR ASSY	1	1	1	1		
2	5VM–85560–00	BASE ASSY	1	1	1	1		
3	14L–85520–M0	.COIL, CHARGE	1	1	1	1		
4	2XJ–81313–M0	.COIL, LIGHTING 1	1	1	1	1		
5	2AL–85580–M0	.COIL, PULSER	1	1	1	1		
6	98511–04020	.SCREW, PAN HEAD	2	2	2	2		
7	98511–04012	.SCREW, PAN HEAD	2	2	2	2		
8	98501–04100	.SCREW, PAN HEAD	1	1	1	1		
9	92901–04100	.WASHER, SPRING	1	1	1	1		
10	98501–04008	.SCREW, PAN HEAD	1	1	1	1		
11	92901–04100	.WASHER, SPRING	1	1	1	1		
12	90179–12248	NUT	1	1	1	1		
13	90201–123L6	WASHER, PLATE	1	1	1	1		

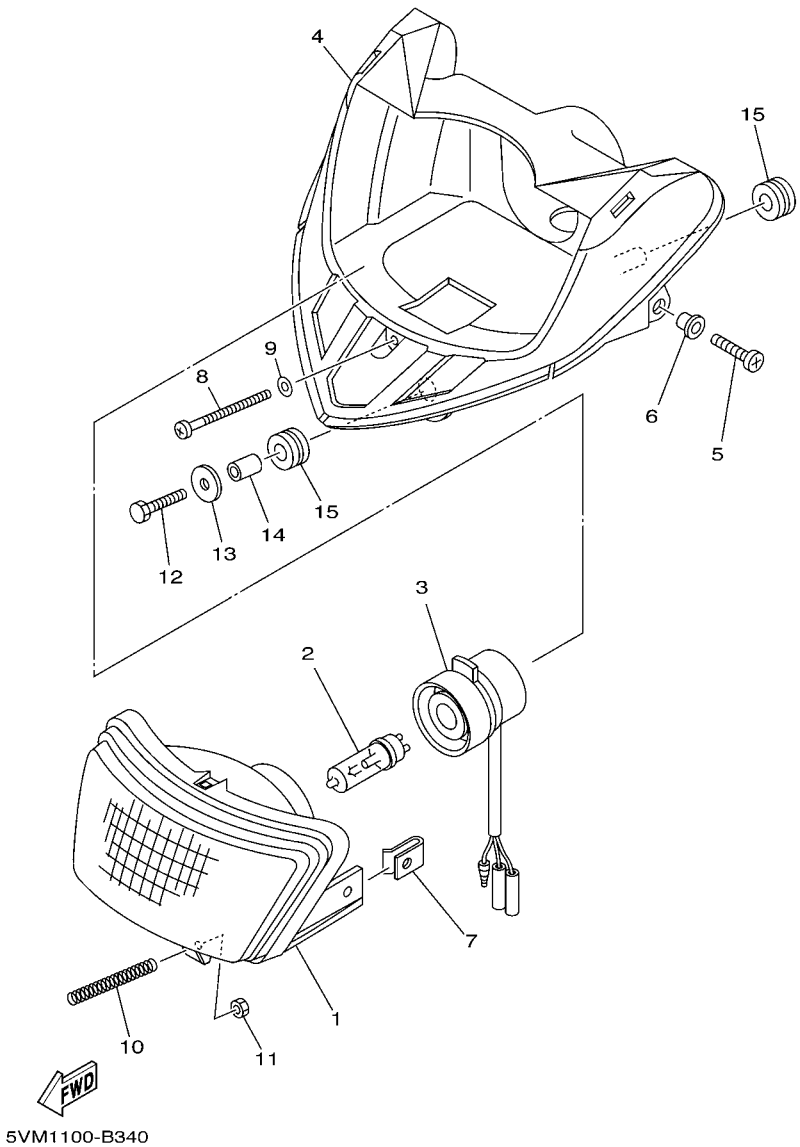

FIG. 34 HEADLIGHT

REF. NO.	PART NO.	DESCRIPTION	CAN	EUR	OCE	JPN		REMARKS
1	5VM–84310–00	HEADLIGHT UNIT ASSY	1	1	1	1		
2	5VM–84314–00	BULB, HEADLIGHT (12V-35/36.5W)	1	1	1	1		HALOGEN
3	5VM–84340–00	SOCKET CORD ASSY 1	1	1	1	1		
4	5VM–84111–00	BODY, HEADLIGHT	1	1	1	1		
5	5VM–84192–00	SCREW, SPECIAL	2	2	2	2		
6	5VM–84133–00	COLLAR, SCREW	2	2	2	2		
7	5VM–84117–00	NUT	2	2	2	2		
8	5VM–8433E–00	SCREW, ADJUSTING	1	1	1	1		
9	5VM–84344–00	WASHER, PLAIN	1	1	1	1		
10	5VM–84335–00	SPRING	1	1	1	1		
11	5VM–84334–00	NUT, ADJUSTING	1	1	1	1		
12	97002–06025	BOLT	1	1	1	1		
13	90201–06085	WASHER, PLATE	1	1	1	1		
14	90387–06299	COLLAR	1	1	1	1		
15	90480–14102	GROMMET	3	3	3	3		

FIG. 35 TAILLIGHT

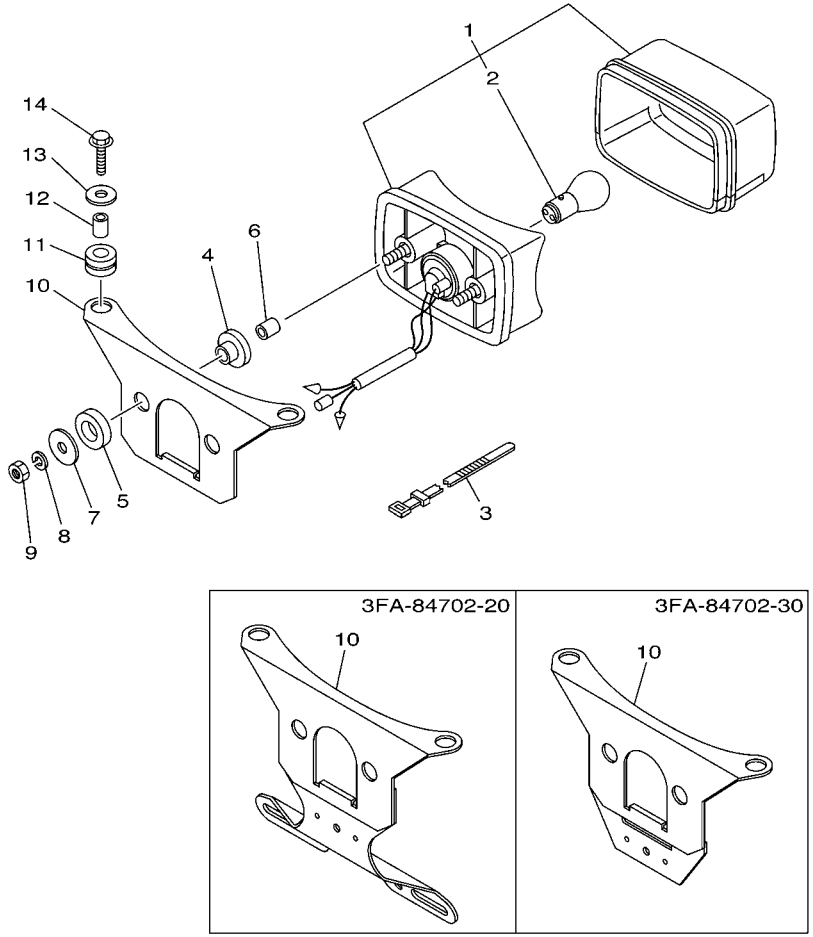

REF. NO.	PART NO.	DESCRIPTION	CAN	EUR	OCE	JPN		REMARKS
1	3FA–84710–00	TAILLIGHT UNIT ASSY	1	1	1	1		
2	1A2–84714–41	.BULB (12V-21/5W)	1	1	1	1		
3	437–83936–01	BAND, SWITCH CORD	1	1	1	1		
4	90480–14088	GROMMET	2	2	2	2		
5	90202–14077	WASHER, PLATE	2	2	2	2		
6	90387–06595	COLLAR	2	2	2	2		
7	90201–06074	WASHER, PLATE	2	2	2	2		
8	92902–06100	WASHER, SPRING	2	2	2	2		
9	95302–06600	NUT	2	2	2	2		
10	3FA–84702–20	BRACKET, TAILLIGHT	1					
	3FA–84702–30	BRACKET, TAILLIGHT		1				
	3FA–84702–10	BRACKET, TAILLIGHT			1	1		
11	90480–14555	GROMMET	2	2	2	2		
12	90387–065L7	COLLAR	2	2	2	2		
13	90201–06033	WASHER, PLATE	2	2	2	2		
14	95802–06025	BOLT, FLANGE	2	2	2	2		

FIG. 36 HANDLE SWITCH & LEVER

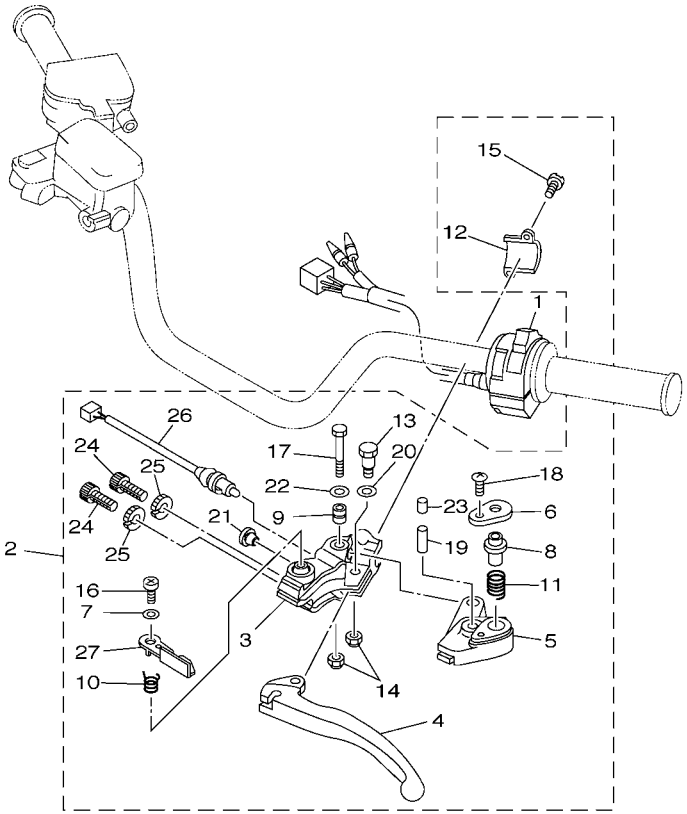

5VM3100-C360

REF. NO.	PART NO.	DESCRIPTION	CAN	EUR	OCE	JPN		REMARKS
1	5KJ–83975–00	SWITCH, HANDLE 2	1	1	1	1		
2	3GG–82910–20	LEVER HOLDER ASSY (LEFT)	1	1	1	1		
3	5LP–82911–10	.HOLDER, LEVER 1	1	1	1	1		
4	5LP–83912–00	.LEVER 1	1	1	1	1		
5	5LP–83922–10	.LEVER 2	1	1	1	1		
6	1UY–83935–10	.COVER	1	1	1	1		
7	5LP–83909–10	.WASHER, SPECIAL	1	1	1	1		
8	1UY–83967–10	.PIN, LOCK 1	1	1	1	1		
9	1UY–83913–00	.COLLAR, LEVER 1	1	1	1	1		
10	1UY–83966–00	.SPRING, RETURN	1	1	1	1		
11	1UY–83962–00	.SPRING	1	1	1	1		
12	5LP–82913–10	.HOLDER, LEVER LOWER 1	1	1	1	1		
13	2H7–83945–00	.BOLT, LEVER	1	1	1	1		
14	5LP–84126–10	.NUT, LENS FITTING	2	2	2	2		
15	5LP–83991–10	.SCREW, LEVER 1	2	2	2	2		
16	5LP–83925–10	.SCREW, LEVER FITTING	1	1	1	1		
17	5LP–8396X–10	.SCREW, LEVER FITTING	1	1	1	1		
18	5LP–83945–10	.BOLT, LEVER	1	1	1	1		
19	91690–40022	.PIN, SPRING	1	1	1	1		
20	5LP–8398X–10	.WASHER, PLATE	1	1	1	1		
21	90338–12192	.PLUG	1	1	1	1		
22	5LP–84127–10	.WASHER, SPECIAL	1	1	1	1		
23	1UY–83956–00	.CAP 1	1	1	1	1		
24	90123–08046	.BOLT	2	2	2	2		
25	90179–08148	.NUT	2	2	2	2		
26	4KB–82917–00	.SWITCH	1	1	1	1		
27	4KB–83965–00	.LEVER, LOCK	1	1	1	1		

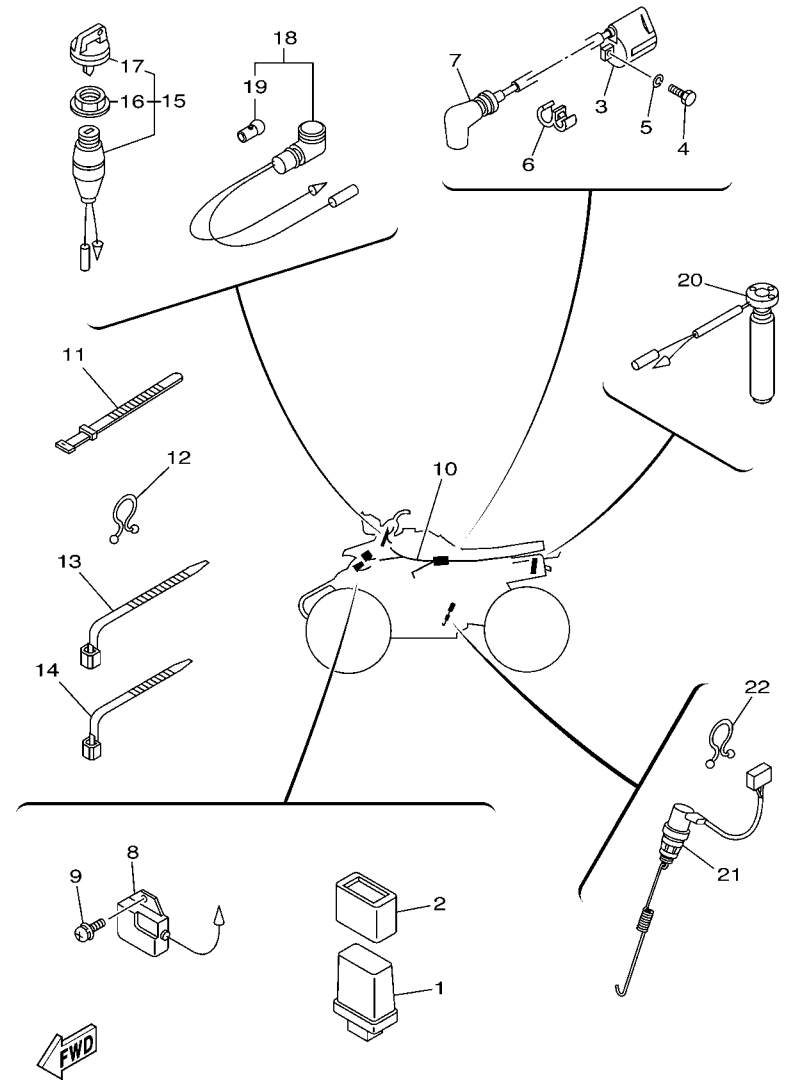

5VM1100-B370

FIG. 37 ELECTRICAL 1

REF. NO.	PART NO.	DESCRIPTION	CAN	EUR	OCE	JPN		REMARKS
1	5VM–85540–00	C.D.I. UNIT ASSY	1	1	1	1		
2	5HP–85546–00	BAND	1	1	1	1		
3	3NS–82310–10	IGNITION COIL ASSY	1	1	1	1		
4	97007–06020	BOLT	2	2	2	2		
5	92907–06100	WASHER, SPRING	2	2	2	2		
6	90464–08002	CLAMP	1	1	1	1		
7	1M1–82370–30	PLUG CAP ASSY	1	1	1	1		
8	82F–81910–A0	VOLTAGE REGULATOR ASSY	1	1	1	1		
9	90159–06056	SCREW, WITH WASHER	2	2	2	2		
10	5VM–82590–00	WIRE HARNESS ASSY	1	1	1	1		
11	3TB–83936–00	BAND, SWITCH CORD	3	3	3	3		
12	90464–16039	CLAMP	1	1	1	1		
13	90464–15195	CLAMP	1	1	1	1		
14	90464–13073	CLAMP	1	1	1	1		
15	2XJ–82510–01	MAIN SWITCH ASSY	1	1	1	1		
16	3HN–82569–00	.NUT, MAIN SWITCH	1	1	1	1		
17	3HN–82579–00	.CAP, KEY	1	1	1	1		
18	2XJ–83530–10	PILOT LIGHT ASSY	1	1	1	1		RED
19	123–83516–21	.BULB (12V-3.4W)	1	1	1	1		
20	2XJ–85720–03	OIL LEVEL GAUGE ASSY	1	1	1	1		
21	5VM–82530–00	STOP SWITCH ASSY	1	1	1	1		
22	90464–16039	CLAMP	2	2	2	2		

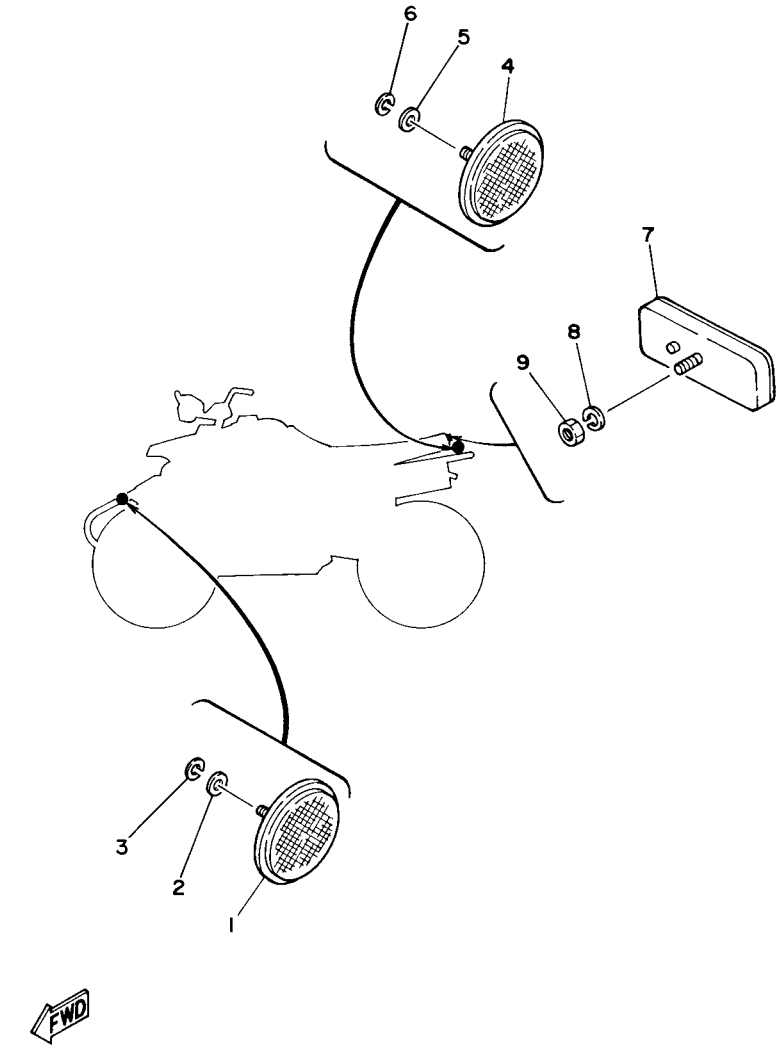

FIG. 38 ELECTRICAL 2

REF. NO.	PART NO.	DESCRIPTION	CAN	EUR	OCE	JPN		REMARKS
1	2EK–85111–00	REFLECTOR, FRONT 1	2					
2	92907–05200	WASHER	2					
3	92907–05100	WASHER, SPRING	2					
4	449–85131–02	REFLECTOR, REAR 1	2					
5	92907–05200	WASHER	2					
6	92907–05100	WASHER, SPRING	2					
7	3Y6–85130–02	REAR REFLECTOR ASSY	1	1				
8	92907–05100	WASHER, SPRING	1	1				
9	95307–05600	NUT	1	1				

FIG. 39 EMBLEM & LABEL 1

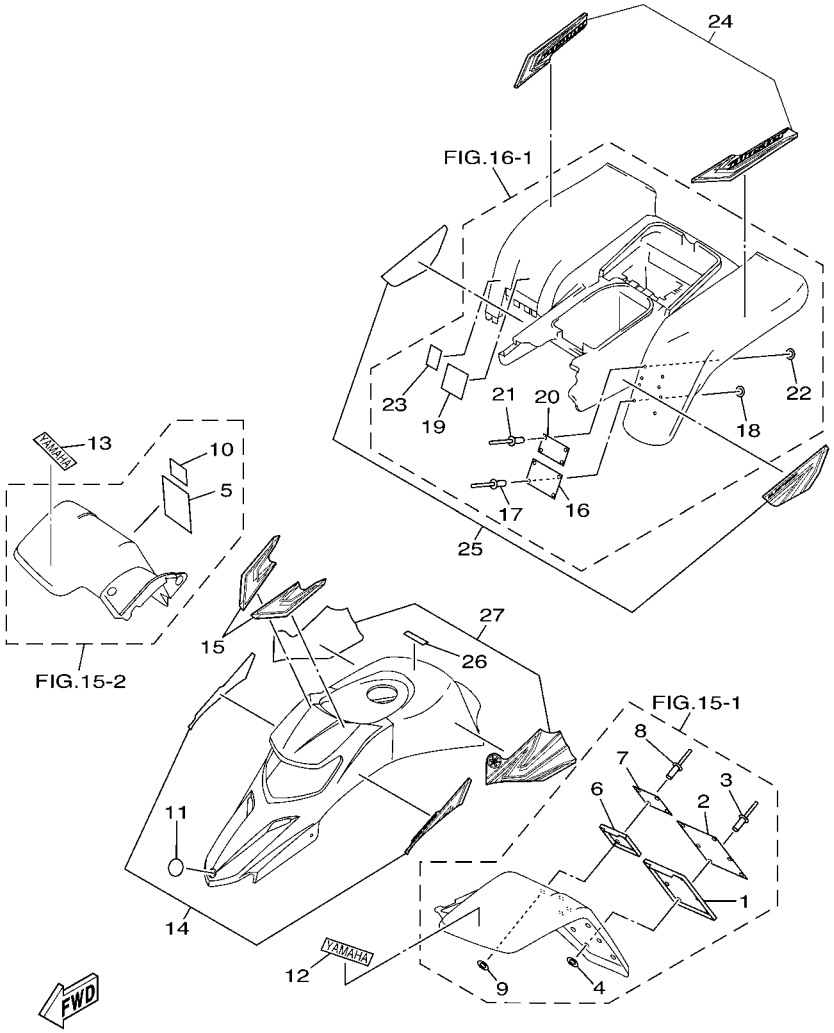

REF. NO.	PART NO.	DESCRIPTION	CAN	EUR	OCE	JPN		REMARKS
1	4EM–21581–60	STAY, PLATE FITTING 1	1					
2	5FE–21568–01	LABEL, WARNING	1					ENGLISH
3	90267–32198	RIVET, BLIND	6					
4	90201–03008	WASHER, PLATE	6					
5	4WU–21568–10	LABEL, WARNING	1					FRENCH
6	3JM–21591–60	STAY, PLATE FITTING 2	1					
7	5FE–21697–01	LABEL, CAUTION 2	1					ENGLISH
8	90267–32198	RIVET, BLIND	4					
9	90201–03008	WASHER, PLATE	4					
10	3JM–21697–10	LABEL, CAUTION 2	1					FRENCH
11	4KN–2836B–00	TUNING FORK MARK	1					
12	3GD–2153E–10	EMBLEM, YAMAHA	1					
13	3GD–2153E–10	EMBLEM, YAMAHA	1					
14	5VM–2159A–40	GRAPHIC SET 1	1					
15	5VM–21570–30	GRAPHIC SET, FRONT FENDER	1					
16	3JM–21696–41	LABEL, CAUTION	1					ENGLISH
17	90267–32004	RIVET, BLIND	4					
18	90201–03008	WASHER, PLATE	4					
19	3JM–21696–B1	LABEL, CAUTION	1					
20	5FE–2151H–01	LABEL 5	1					ENGLISH
21	90267–32004	RIVET, BLIND	4					
22	90201–03008	WASHER, PLATE	4					
23	4WU–2151H–10	LABEL 5	1					FRENCH
24	5VM–2165B–00	GRAPHIC SET,REAR FENDER	1					
25	5VM–2165A–40	GRAPHIC SET,REAR FENDER	1					
26	4SH–2416E–00	LABEL, CAUTION CANADA	1					ENGLISH
27	5VM–2173L–80	GRAPHIC SET 1	1					

FIG. 40 EMBLEM & LABEL 2

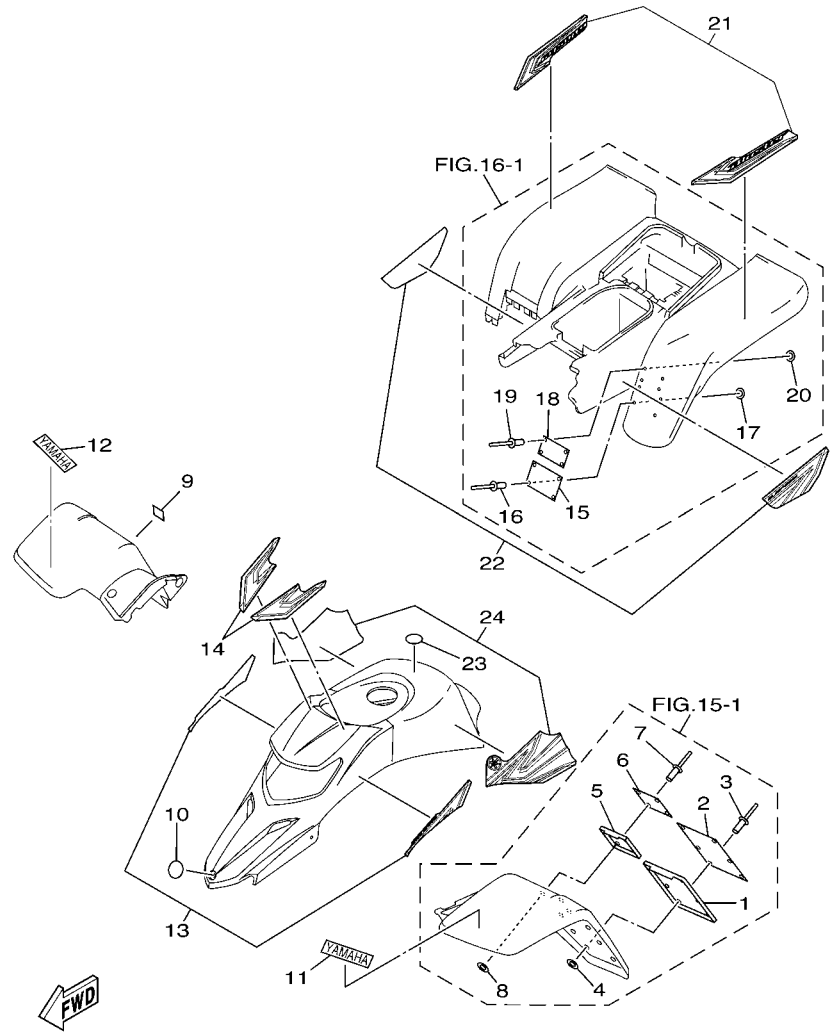

REF. NO.	PART NO.	DESCRIPTION	CAN	EUR	OCE	JPN		REMARKS
1	4EM–21581–60	STAY, PLATE FITTING 1		1				
2	5FK–21568–00	LABEL, WARNING		1				
3	90267–32198	RIVET, BLIND		6				
4	90201–03008	WASHER, PLATE		6				
5	3JM–21591–60	STAY, PLATE FITTING 2		1				
6	5FK–21697–00	LABEL, CAUTION 2		1				
7	90267–32198	RIVET, BLIND		4				
8	90201–03008	WASHER, PLATE		4				
9	4GB–2155A–00	MARK,EC		1				
10	4KN–2836B–00	TUNING FORK MARK		1				
11	3GD–2153E–10	EMBLEM, YAMAHA		1				
12	3GD–2153E–10	EMBLEM, YAMAHA		1				
13	5VM–2159A–40	GRAPHIC SET 1		1				
14	5VM–21570–30	GRAPHIC SET, FRONT FENDER		1				
15	5KJ–21696–M0	LABEL, CAUTION		1				
16	90267–32004	RIVET, BLIND		4				
17	90201–03008	WASHER, PLATE		4				
18	5FK–2151H–00	LABEL 5		1				
19	90267–32004	RIVET, BLIND		4				
20	90201–03008	WASHER, PLATE		4				
21	5VM–2165B–00	GRAPHIC SET,REAR FENDER		1				
22	5VM–2165A–40	GRAPHIC SET,REAR FENDER		1				
23	3ME–2415E–01	LABEL, CAUTION		1				
24	5VM–2173L–80	GRAPHIC SET 1		1				

FIG. 41 EMBLEM & LABEL 3

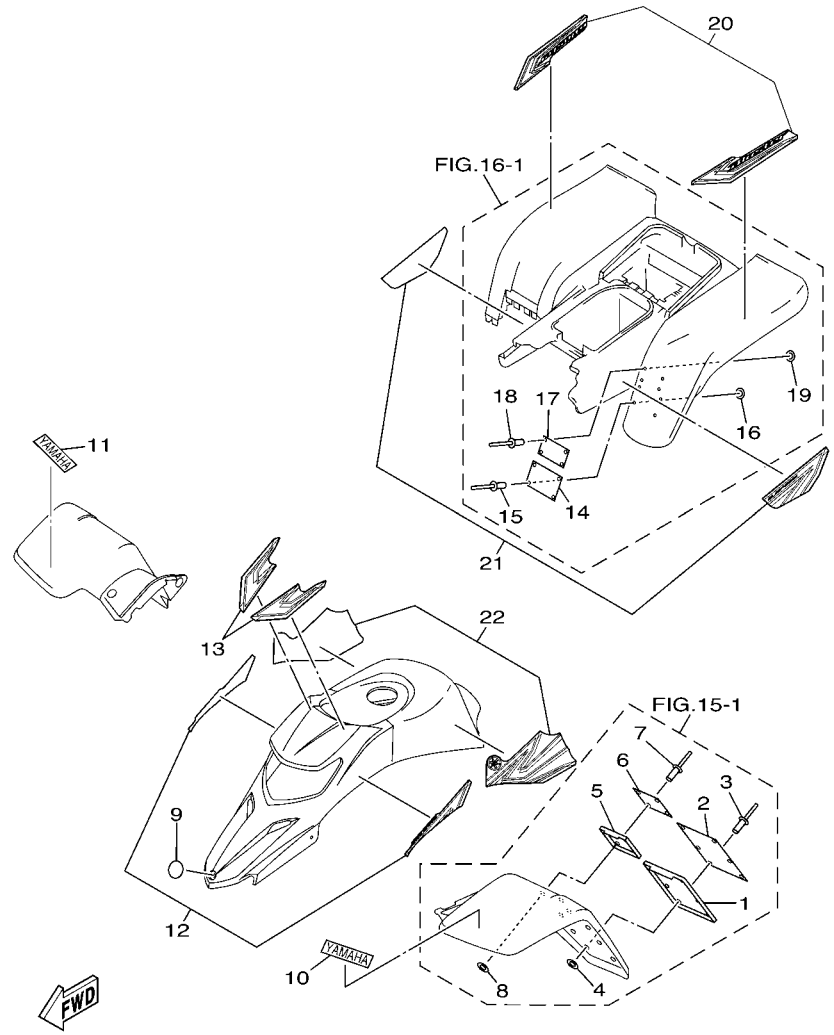

REF. NO.	PART NO.	DESCRIPTION	CAN	EUR	OCE	JPN		REMARKS
1	4EM–21581–60	STAY, PLATE FITTING 1			1			
2	5FE–21568–11	LABEL, WARNING			1			ENGLISH
3	90267–32198	RIVET, BLIND			6			
4	90201–03008	WASHER, PLATE			6			
5	3JM–21591–60	STAY, PLATE FITTING 2			1			
6	5FE–21697–01	LABEL, CAUTION 2			1			ENGLISH
7	90267–32198	RIVET, BLIND			4			
8	90201–03008	WASHER, PLATE			4			
9	4KN–2836B–00	TUNING FORK MARK			1			
10	3GD–2153E–10	EMBLEM, YAMAHA			1			
11	3GD–2153E–10	EMBLEM, YAMAHA			1			
12	5VM–2159A–40	GRAPHIC SET 1			1			
13	5VM–21570–30	GRAPHIC SET, FRONT FENDER			1			
14	3JM–21696–41	LABEL, CAUTION			1			ENGLISH
15	90267–32004	RIVET, BLIND			4			
16	90201–03008	WASHER, PLATE			4			
17	5FE–2151H–01	LABEL 5			1			ENGLISH
18	90267–32004	RIVET, BLIND			4			
19	90201–03008	WASHER, PLATE			4			
20	5VM–2165B–00	GRAPHIC SET,REAR FENDER			1			
21	5VM–2165A–40	GRAPHIC SET,REAR FENDER			1			
22	5VM–2173L–80	GRAPHIC SET 1			1			

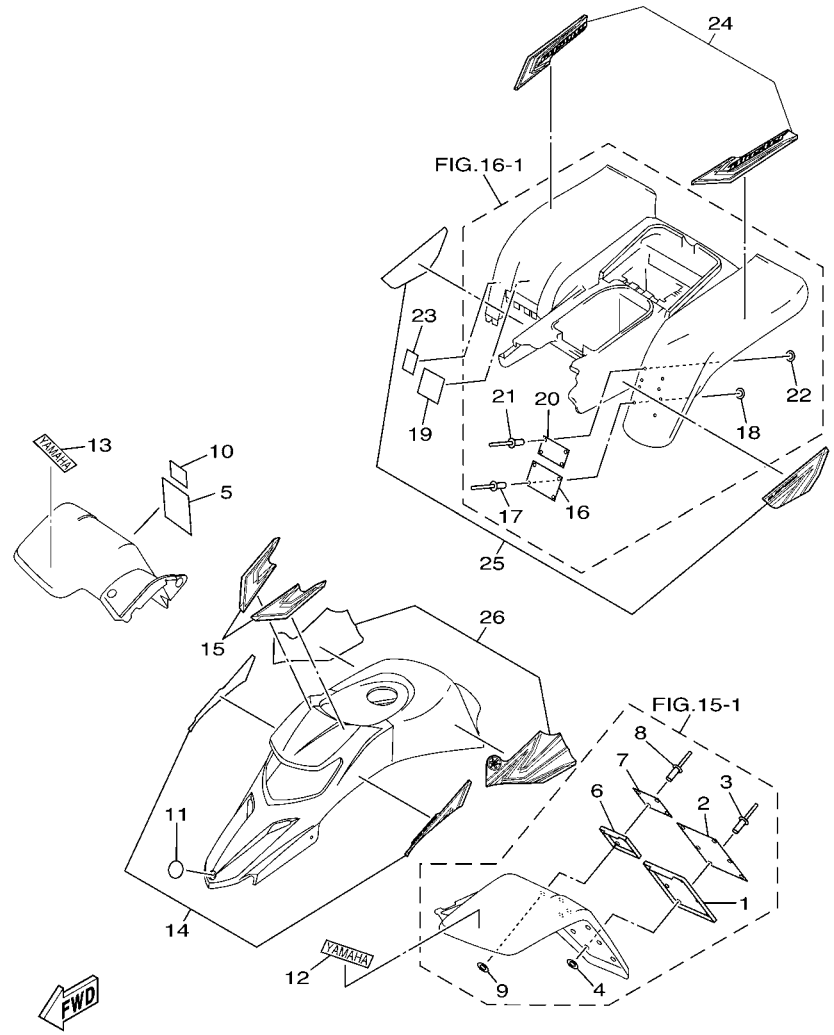

FIG. 42 EMBLEM & LABEL 4

REF. NO.	PART NO.	DESCRIPTION	CAN	EUR	OCE	JPN		REMARKS
1	4EM–21581–60	STAY, PLATE FITTING 1				1		
2	5FE–21568–11	LABEL, WARNING				1		ENGLISH
3	90267–32198	RIVET, BLIND				6		
4	90201–03008	WASHER, PLATE				6		
5	4SH–21568–00	LABEL, WARNING				1		JAPANESE
6	3JM–21591–60	STAY, PLATE FITTING 2				1		
7	5FE–21697–01	LABEL, CAUTION 2				1		ENGLISH
8	90267–32198	RIVET, BLIND				4		
9	90201–03008	WASHER, PLATE				4		
10	4SH–21697–00	LABEL, CAUTION 2				1		JAPANESE
11	4KN–2836B–00	TUNING FORK MARK				1		
12	3GD–2153E–10	EMBLEM, YAMAHA				1		
13	3GD–2153E–10	EMBLEM, YAMAHA				1		
14	5VM–2159A–40	GRAPHIC SET 1				1		
15	5VM–21570–30	GRAPHIC SET, FRONT FENDER				1		
16	3JM–21696–41	LABEL, CAUTION				1		ENGLISH
17	90267–32004	RIVET, BLIND				4		
18	90201–03008	WASHER, PLATE				4		
19	3JM–21696–31	LABEL, CAUTION				1		JAPANESE
20	5FE–2151H–01	LABEL 5				1		ENGLISH
21	90267–32004	RIVET, BLIND				4		
22	90201–03008	WASHER, PLATE				4		
23	4LB–2151H–02	LABEL 5				1		
24	5VM–2165B–00	GRAPHIC SET,REAR FENDER				1		
25	5VM–2165A–40	GRAPHIC SET,REAR FENDER				1		
26	5VM–2173L–80	GRAPHIC SET 1				1		

NUMERICAL INDEX

PART NO.	GRID NO.
2XJ–11111–00	B – 2
1K6–11128–00	B – 2
3R6–11162–00	B – 2
3R9–11162–00	B – 2
2XJ–11181–00	B – 2
2XJ–11311–02	B – 2
10V–1131E–00	B – 2
3JM–11351–01	B – 2
37F–11400–00	B – 3
37F–11412–00	B – 3
37F–11422–00	B – 3
37F–11454–00	B – 3
37F–11530–00	B – 4
10V–11536–01	B – 3
3JM–11601–00	B – 3
3JM–11601–10	B – 3
3JM–11601–20	B – 3
2XJ–11631–01–97	B – 3
4L0–11633–00	B – 3
2XJ–11635–01	B – 3
2XJ–11636–01	B – 3
43G–11651–00	B – 3
37F–11681–00	B – 3
2XJ–13100–00	B – 5
137–13115–01	B – 10
126–13116–01	B – 5
5VM–13174–00	B – 11
10V–13175–00	B – 5
137–13176–00	B – 5
10V–13178–01	B – 5
2XJ–13565–00	B – 6
2HF–13610–01	B – 6
2HF–13613–00	B – 6
58T–13616–01	B – 6
3JM–13621–00	B – 6
5VM–14101–00	B – 7
10W–14104–00	B – 7
2MA–14107–28	B – 7
2XJ–14112–20	B – 7
248–14131–00	B – 7
4L0–14141–46	B – 7
260–14142–32	B – 7
137–14143–46	B – 7
500–14146–00	B – 7
558–14147–00	B – 7
137–14153–00	B – 7
2GU–14153–00	B – 7
2GU–14161–00	B – 7

PART NO.	GRID NO.
2GU–14171–00	B – 7
304–14184–00	B – 7
4L0–14185–00	B – 7
537–14186–00	B – 7
12R–14191–00	B – 7
2NL–14197–00	B – 7
4L0–14197–00	B – 7
2GU–14243–00	B – 7
2XJ–14412–01	B – 6
2XJ–14437–00	B – 6
2XJ–14451–00	B – 6
2XJ–14453–00	B – 6
59V–14457–00	B – 6
2XJ–14458–00	B – 6
2XJ–14459–00	B – 6
15A–14462–00	B – 6
2XJ–14477–00	B – 6
2XJ–14610–00	B – 9
3PA–14613–10	B – 9
1W2–14714–00	B – 9
2XJ–14718–00	B – 9
2XJ–14752–00	B – 9
2XJ–14753–00	B – 9
2XJ–14755–10	B – 9
4BD–14766–00	B – 9
565–14771–00	B – 9
5VM–1490J–00	B – 8
2GU–14952–00	B – 7
7RB–14997–00	C – 4
2XJ–15111–01	B – 10
2XJ–15121–00	B – 10
37F–15128–00	B – 10
3Y1–15363–00	B – 11
2XJ–15379–00	B – 11
2XJ–15411–00	B – 11
37F–15416–00	B – 11
2XJ–15420–01	B – 11
3JM–15451–11	B – 11
2XJ–15620–10	B – 12
10V–15641–00	B – 12
10V–15651–00	B – 12
10V–15660–00	B – 12
10V–15666–00	B – 12
2JK–16111–01	B – 13
3JM–16150–01	B – 13
2TV–16154–00	B – 13
4V0–16321–00	B – 13
1V1–16324–00	B – 13

PART NO.	GRID NO.
1HX–16331–00	B – 13
37F–16351–00	B – 13
1W1–16356–02	B – 13
2J5–16357–00	B – 13
1W1–16358–01	B – 13
37F–16371–01	B – 13
37F–16380–02	B – 13
1HX–16383–00	B – 13
2XJ–17121–00	B – 14
2XJ–17131–00	B – 14
2XJ–17151–00	B – 14
2XJ–17161–00	B – 14
2XJ–17211–00	B – 14
2XJ–17221–01	B – 14
2XJ–17231–00	B – 14
2XJ–17241–00	B – 14
2XJ–17251–00	B – 14
2XJ–17261–00	B – 14
2XJ–17411–00	B – 14
37F–17421–01	B – 14
5H0–17456–00	B – 15
10V–17471–00	B – 15
37F–18101–02	C – 3
2XJ–18111–10	C – 3
132–18113–01	C – 3
10V–18140–00	C – 2
37F–18511–00	C – 2
37F–18512–00	C – 2
37F–18513–00	C – 2
5X5–18531–01	C – 2
34X–18535–00	C – 2
5KJ–18540–00	C – 2
5VM–21110–10	C – 4
2XJ–21513–01	C – 5
5FK–2151H–00	E – 6
5FE–2151H–01	E – 5
	E – 7
	E – 8
4LB–2151H–02	E – 8
4WU–2151H–10	E – 5
3GD–2153E–10	E – 5
	E – 6
	E – 7
	E – 8
2XJ–21556–D0	C – 5
4GB–2155A–00	E – 6
4SH–21568–00	E – 8
5FK–21568–00	E – 6

PART NO.	GRID NO.
5FE–21568–01	E – 5
4WU–21568–10	E – 5
5FE–21568–11	E – 7
	E – 8
5VM–21570–30	E – 5
	E – 6
	E – 7
	E – 8
4EM–21581–60	E – 5
	E – 6
	E – 7
	E – 8
3JM–21591–60	E – 5
	E – 6
	E – 7
	E – 8
5VM–2159A–40	E – 5
	E – 6
	E – 7
	E – 8
2XJ–21614–00	C – 6
3JM–21621–00	C – 6
5VM–2165A–40	E – 5
	E – 6
	E – 7
	E – 8
5VM–2165B–00	E – 5
	E – 6
	E – 7
	E – 8
3JM–21691–00	C – 6
3JM–21696–31	E – 8
3JM–21696–41	E – 5
	E – 7
	E – 8
3JM–21696–B1	E – 5
5KJ–21696–M0	E – 6
4SH–21697–00	E – 8
5FK–21697–00	E – 6
5FE–21697–01	E – 5
	E – 7
	E – 8
3JM–21697–10	E – 5
2XJ–2171A–E0	C – 5
2XJ–2172W–00	C – 7
3SP–21732–00	C – 4
5VM–2173L–80	E – 5
	E – 6

PART NO.	GRID NO.
5VM–2173L–80	E – 7
	E – 8
2XJ–21746–00	C – 7
2XJ–21751–01	C – 7
2N3–21771–01	C – 7
5VM–22110–10	C – 8
2XJ–22123–00	C – 8
2XJ–22124–00	C – 8
156–22127–00	C – 8
1W1–22128–00	C – 9
2K6–22128–01	C – 8
2JN–22141–00	C – 8
336–22141–00	C – 11
2GU–22151–10	C – 8
2GU–22155–00	C – 8
30X–22178–00	C – 4
4V4–22184–00	C – 4
38W–22199–00	C – 8
2XJ–2219X–00	C – 8
2XJ–22201–20	C – 9
2XJ–22201–30	C – 9
2XJ–22201–40	C – 9
2XJ–22210–20–36	C – 9
2XJ–22210–30–36	C – 9
2XJ–22210–40–36	C – 9
2XJ–22212–00–36	C – 9
3P6–22214–00	C – 9
1NU–22216–00	C – 9
22W–22223–00	C – 9
1NU–22226–00	C – 9
2XJ–2331R–00	C – 12
2XJ–23350–20–36	C – 12
5VM–23391–20	C – 5
5VM–23511–00	C – 15
2XJ–23512–01	C – 15
5YT–23517–00	C – 11
5VM–23521–00	D – 2
2XJ–23522–01	D – 2
5VM–23540–10	C – 11
5VM–23550–10	C – 11
3JM–23570–00–P0	C – 11
3JM–23580–00–P0	C – 11
1UY–23812–00	C – 10
5VM–23813–10	C – 10
8K1–23814–00	C – 10
2XJ–23831–01	C – 10
1UY–23841–01	C – 10
1UY–23845–01	C – 10

PART NO.	GRID NO.
5VM–23868–00	C – 10
1UY–23894–01	C – 10
2XJ–24110–00	C – 13
2XJ–2414H–01	C – 13
3JM–2414J–00	C – 13
3ME–2415E–01	E – 6
4SH–2416E–00	E – 5
55W–24500–02	C – 13
4X8–24512–00	C – 13
3AC–24523–00	C – 13
3AJ–24534–01	C – 13
5KM–24610–00	C – 13
5KJ–2470F–C0	C – 14
5KJ–24710–C0	C – 14
4K0–24774–01	C – 14
4K0–24775–00	C – 14
29U–24776–00	C – 14
3GD–25111–01	C – 15
1UY–25117–00	C – 15
1S3–25127–00	C – 15
3GD–2514A–10	C – 15
3GD–2515A–10	C – 15
2XJ–25180–00–35	C – 15
5VM–25311–10	D – 4
2XJ–25317–00	D – 4
5VM–25381–10	D – 4
2XJ–25383–40	D – 4
2XJ–25383–50	D – 4
2XJ–25386–00	D – 4
2XJ–25388–00	D – 4
2VY–25390–00–35	D – 4
2XJ–25412–00	D – 4
2XJ–25440–21	D – 4
2GU–25712–00	D – 6
3GD–2580T–00	D – 3
3GD–2580U–00	D – 3
5LP–2580W–10	D – 6
3GD–25827–00	D – 3
3GD–25828–00	D – 3
3GD–2582T–10	D – 3
5FK–2582W–00	D – 6
5MV–25833–00	D – 9
5LP–2583T–01	D – 9
5VM–2583V–00	D – 11
5LP–25844–00	D – 11
4PX–25852–00	D – 11
5LP–25852–01	D – 9
2VN–25854–00	D – 11

NUMERICAL INDEX

PART NO.	GRID NO.
4L0–25854–00	D – 9
2VN–25855–00	D – 11
2GU–25866–00	D – 9
2VN–25866–00	D – 11
5LP–25867–00	D – 9
5VM–25871–00	D – 9
5VM–25872–00	D – 9
5VM–25873–00	D – 9
5VM–25874–00	D – 11
5VM–25886–00	D – 9
2VN–25894–00	D – 11
5VM–25895–00	D – 11
5MV–2589F–00	D – 9
4NK–2589H–00	D – 9
1UY–25917–51	D – 6
1UY–25924–51	D – 6
3GD–25933–00	D – 3
1UY–25933–51	D – 6
1UY–25972–51	D – 6
1UY–25977–51	D – 6
5LP–26111–20	D – 7
5TH–26124–20	D – 7
1NV–26129–00	D – 7
5LP–26241–00	D – 7
3GG–26250–30	D – 7
1UY–26259–00	D – 9
2GU–26259–00	D – 7
2GU–2625G–01	D – 7
2GU–2625H–00	D – 7
2GU–2625J–00	D – 7
2GU–2628F–20	D – 7
2GU–2628G–00	D – 7
5VM–26311–00	D – 7
2GU–26314–00	D – 7
5VM–26335–00	D – 7
2GU–2633K–00	B – 8
5VM–26341–00	D – 8
1UY–2637A–01	D – 7
2GU–26398–00	D – 7
371–27114–00	C – 14
5VM–27211–10	D – 10
2YK–27222–00	D – 11
3KW–27234–00	D – 11
5KJ–27411–00	D – 10
5VM–27421–00	D – 10
3JM–27445–00	D – 10
3JM–27446–00	D – 10
2XJ–28100–00	C – 4

PART NO.	GRID NO.
1NV–2811A–01	C – 4
4KN–2836B–00	E – 5
	E – 6
	E – 7
	E – 8
5GT–2836B–10	D – 7
2HR–28415–00	D – 12
3JM–2845N–20	D – 12
3JM–2845N–30	D – 12
5KJ–2845R–30	D – 12
5KJ–2845R–40	D – 12
2XJ–81313–M0	D – 13
82F–81910–A0	E – 3
2T4–82131–00	C – 6
3NS–82310–10	E – 3
1M1–82370–30	E – 3
2XJ–82510–01	E – 3
5VM–82530–00	E – 3
5TG–82567–00	D – 7
3HN–82569–00	E – 3
3HN–82579–00	E – 3
5VM–82590–00	E – 3
3JM–8259E–00	B – 8
3GG–82910–20	E – 2
5LP–82911–10	E – 2
4V4–82913–00	D – 7
5LP–82913–10	E – 2
4KB–82917–00	E – 2
123–83516–21	E – 3
2XJ–83530–10	E – 3
5LP–83909–10	E – 2
5LP–83912–00	E – 2
1UY–83913–00	E – 2
5LP–83922–00	D – 9
5LP–83922–10	E – 2
5LP–83925–10	E – 2
1UY–83935–10	E – 2
3TB–83936–00	E – 3
437–83936–01	D – 7
	D – 15
2H7–83945–00	E – 2
5LP–83945–10	E – 2
1UY–83956–00	E – 2
1UY–83962–00	E – 2
4KB–83965–00	E – 2
1UY–83966–00	E – 2
1UY–83967–10	E – 2
5LP–8396X–10	E – 2

PART NO.	GRID NO.
5KJ–83975–00	E – 2
5LP–83980–00	D – 9
5LP–8398X–10	E – 2
5LP–83991–10	E – 2
5VM–84111–00	D – 14
5VM–84117–00	D – 14
5LP–84126–10	E – 2
5LP–84127–10	E – 2
5VM–84133–00	D – 14
5VM–84192–00	D – 14
5VM–84310–00	D – 14
5VM–84314–00	D – 14
5VM–84334–00	D – 14
5VM–84335–00	D – 14
5VM–8433E–00	D – 14
5VM–84340–00	D – 14
5VM–84344–00	D – 14
3FA–84702–10	D – 15
3FA–84702–20	D – 15
3FA–84702–30	D – 15
3FA–84710–00	D – 15
1A2–84714–41	D – 15
2EK–85111–00	E – 4
3Y6–85130–02	E – 4
449–85131–02	E – 4
14L–85520–M0	D – 13
5VM–85540–00	E – 3
5HP–85546–00	E – 3
2XJ–85550–M1	D – 13
5VM–85560–00	D – 13
2AL–85580–M0	D – 13
2XJ–85720–03	E – 3
5LP–W0041–00	D – 9
5VM–W0042–50	D – 11
3GD–W0045–00	D – 3
5LP–W0046–50	D – 6
3GD–W0047–00	D – 3
5LP–W0047–50	D – 6
1UY–W0048–50	D – 3
	D – 6
3GD–W0057–00	D – 3
5LP–W0057–50	D – 6
2XJ–W2151–D1	C – 5
2XJ–W215B–D1	C – 5
2XJ–W215D–D0	C – 5
2XJ–W215E–D1	C – 5
2XJ–W2161–T1	C – 6
2XJ–W216B–T1	C – 6

PART NO.	GRID NO.
2XJ–W216C–T1	C – 6
90101–08777	D – 4
90101–10678	D – 5
90105–08211	D – 6
90105–08538	D – 3
90105–08721	C – 4
90105–10131	C – 12
90105–10135	C – 11
90105–10328	C – 4
90105–10507	C – 15
90105–10549	C – 15
90109–063F7	C – 2
90109–081F0	D – 6
90109–10736	C – 9
90114–10007	C – 15
90114–10010	D – 4
90116–08042	B – 9
90116–08318	B – 2
90116–08388	B – 2
90116–08394	B – 2
90116–08507	D – 4
90119–05001	B – 13
90119–06056	C – 6
90119–06073	C – 13
90123–08046	E – 2
90149–06108	C – 13
90149–06306	C – 5
	C – 6
90149–08268	D – 3
90150–06037	C – 6
90154–05002	C – 5
90154–05005	C – 6
90157–06071	B – 15
90159–06056	E – 3
90159–06085	B – 6
90170–08258	D – 4
90170–10186	C – 10
90170–12337	B – 4
90170–12370	B – 13
90170–33376	D – 5
90171–10001	C – 10
90171–10046	D – 2
90171–14002	C – 15
90171–14004	D – 4
90179–08148	E – 2
90179–08270	B – 9
90179–08299	B – 2
90179–12248	D – 13

PART NO.	GRID NO.
90179–12567	B – 13
90179–12659	B – 12
90185–10012	C – 11
90185–10060	C – 4
90185–10115	C – 10
90185–14070	C – 8
90201–03008	E – 5
	E – 6
	E – 7
	E – 8
90201–06033	D – 15
90201–06074	D – 15
90201–06085	D – 14
90201–060L5	C – 13
90201–08054	C – 4
90201–08066	D – 11
90201–08624	B – 5
90201–08649	B – 2
90201–10037	C – 11
90201–10118	D – 9
	D – 11
90201–10126	C – 9
90201–10430	C – 15
90201–106F2	D – 5
90201–10774	C – 4
	C – 10
90201–12172	B – 10
90201–123L6	D – 13
90201–14021	D – 4
90201–14215	C – 8
90201–14217	B – 13
90201–14586	C – 15
90201–15018	D – 10
90201–150J4	B – 14
90201–154E8	B – 12
90201–166L5	B – 10
90201–180P2	B – 13
90201–200J7	B – 12
90201–20266	B – 14
90201–206L6	B – 14
90201–22555	B – 14
90201–244A9	C – 8
90202–14077	D – 15
90206–06090	B – 9
90208–18046	B – 13
90209–06096	B – 6
90209–16133	B – 14
90209–18135	B – 14

PART NO.	GRID NO.
90209–22248	B – 3
90215–12235	B – 4
90215–12271	B – 13
90240–08005	D – 11
90240–12092	C – 9
90250–06013	C – 2
90267–32004	E – 5
	E – 6
	E – 7
	E – 8
90267–32198	E – 5
	E – 6
	E – 7
	E – 8
90280–03017	B – 3
90282–05013	B – 4
90282–05047	B – 3
90336–28053	C – 10
90338–09206	B – 10
90338–12192	E – 2
90338–23172	C – 4
90340–12059	B – 10
90380–12051	C – 9
90380–22111	C – 8
90381–15040	C – 4
90381–15088	C – 11
90387–06299	D – 14
90387–06595	D – 15
90387–065L7	D – 15
90387–066H4	C – 13
90387–07391	C – 7
90387–07598	C – 13
90387–090R0	C – 10
90387–101R3	C – 11
90387–101U6	C – 11
90387–150R1	C – 15
90387–206K3	B – 3
90387–561U7	D – 4
90401–10159	D – 9
	D – 11
90430–04004	B – 5
90445–054F8	B – 5
90445–08013	C – 13
90445–084J3	C – 7
90445–09019	B – 10
90445–100E9	C – 13
90450–44046	B – 6
90460–37026	B – 9

PART NO.	GRID NO.
90460–49058	B – 6
90460–56105	B – 6
90464–08002	E – 3
90464–08051	C – 4
90464–13073	E – 3
90464–15195	E – 3
90464–16039	E – 3
90465–10069	B – 11
90467–08075	C – 7
90467–09006	C – 13
90467–11044	D – 11
90467–22080	B – 6
90468–02033	B – 5
90468–15020	B – 5
90468–26048	B – 12
90480–01209	B – 10
90480–01400	C – 13
90480–13238	C – 7
90480–14088	D – 15
90480–14102	D – 14
90480–14555	D – 15
90480–18290	C – 13
90480–18411	D – 10
90480–48493	C – 7
90501–20568	B – 13
90506–20380	D – 10
90508–20555	B – 13
90508–20779	C – 14
90508–26667	B – 12
90508–29749	C – 2
90508–32553	C – 3
91401–16012	D – 11
91401–20020	C – 10
	C – 15
91401–30025	C – 9
	C – 15
91401–30030	D – 4
91690–40022	E – 2
92012–08012	C – 6
92017–08016	D – 10
92901–04100	D – 13
92902–05100	D – 7
92902–05200	C – 6
92902–06100	D – 15
92902–06200	C – 5
	C – 6
92907–03100	B – 6
	B – 8

PART NO.	GRID NO.
92907–03600	B – 8
92907–05100	E – 4
92907–05200	E – 4
92907–06100	E – 3
92907–06200	B – 13
92907–06600	B – 6
	B – 10
92907–12600	C – 9
92990–04100	B – 7
92990–05100	B – 7
93101–10001	B – 5
93101–12173	C – 3
93102–20143	B – 14
93102–22216	C – 15
93102–25012	B – 3
93102–42260	D – 4
93102–43341	D – 4
93103–32099	B – 3
93104–09025	D – 7
93104–14004	B – 13
93105–26026	C – 15
93106–22019	C – 8
93108–35004	C – 8
93109–20014	B – 12
93112–31011	C – 10
93210–15414	C – 4
93210–15620	D – 11
93210–19123	B – 11
93210–61750	C – 6
93306–00446	C – 15
93306–00705	D – 4
93306–20211	B – 3
93306–20231	C – 15
93306–20335	B – 3
93306–20431	B – 14
93306–20562	B – 3
93306–30438	B – 14
93306–30556	B – 3
93310–316H6	B – 3
93310–522L4	B – 3
93311–31576	B – 14
93311–51554	B – 14
93315–21429	B – 13
93317–22237	C – 8
93410–20038	B – 14
93410–22039	B – 14
93430–08007	B – 5
93430–12008	D – 10

PART NO.	GRID NO.
93440–04002	C – 14
93440–15012	B – 14
93440–42101	C – 9
93450–17044	B – 3
93503–16003	B – 13
93603–22028	B – 5
93700–06004	C – 4
	C – 11
93832–13164	B – 14
93900–00022	C – 15
	D – 4
94107–100X3	C – 15
94107–105W8	C – 15
94110–085W7	D – 4
94110–085W9	D – 4
94581–87092	D – 4
94681–87011	D – 5
94701–00204	B – 2
94703–00204	B – 2
95027–06030	B – 11
95027–06035	B – 11
95302–06600	D – 15
95302–08600	D – 11
95307–05600	E – 4
95307–05700	D – 7
95307–06600	B – 13
95307–08600	D – 4
95307–10700	C – 10
95317–08600	B – 2
95337–10600	C – 15
95602–05100	C – 6
95602–06100	C – 5
	C – 6
95604–06100	D – 9
95607–05100	B – 6
	D – 7
95607–10100	C – 9
95707–06500	C – 14
95707–08500	D – 10
95707–10500	C – 15
	D – 4
95802–06010	C – 15
95802–06025	D – 15
95802–08012	C – 4
95807–06016	D – 9
	D – 11
95807–08040	C – 8
95812–08016	D – 12

PART NO.	GRID NO.
95817–06012	B – 9
95817–08016	B – 9
95817–08020	D – 11
95817–10025	D – 10
95822–06012	C – 5
95822–08012	C – 8
95827–06025	C – 7
	D – 9
95827–08016	D – 10
95827–08035	C – 10
97002–06025	D – 14
97007–06020	E – 3
97007–06025	B – 6
97012–06020	C – 3
97022–08060	C – 10
97027–06012	B – 15
98501–04008	D – 13
98501–04100	D – 13
98502–04008	B – 7
98502–04016	B – 7
98502–05008	B – 7
98502–05020	D – 7
98507–03008	C – 13
98507–03010	B – 8
98507–05014	B – 5
98507–05020	D – 7
98507–06030	B – 10
	B – 11
98507–06045	B – 10
98507–06060	B – 6
	B – 10
98507–06075	B – 10
98507–08010	B – 10
98511–04012	D – 13
98511–04020	D – 13
98517–03008	B – 6
98907–03006	D – 7
98907–04008	B – 5
98907–06010	B – 9
99001–10600	C – 3
99009–10400	C – 2
99009–15400	B – 12
99530–10014	B – 11
99530–10114	B – 2
99530–12016	B – 10

PART NO.	GRID NO.

PART NO.	GRID NO.